Lighting technology for light commercial-vehicles and trucks





Lighting technology

2010 | 2011

BOSCH

Lighting technology from Bosch – a wide range of lighting products – **all from a single source**



You can count on competence: Bosch lighting technology in original-equipment quality.

Bosch can provide you with the most suitable product for almost any application. We offer you headlamps, tail lamps, bulbs, rotating beacons, auxiliary lamps and work lamps.

And as we are a full-range provider working constantly on new technologies, our product range also includes testers and diagnostic software. An important argument for you – particularly when it comes to xenon technology, which is increasingly being used by original equipment manufacturers.

Bosch – Your first stop for all your lighting needs.

Contents

	Page	Chapter
Range		
	A 2	Part-number overview for Section A
	A 4	Additional headlamps – Driving lamps
	A 26	Additional headlamps – Fog lamps
	A 38	Floodlamps
	A 54	Spot lamps
	A 60	Beacons
	A 76	Headlight units
	A 90	Headlamp-housing assemblies
	A 94	External-fitting headlamps
	A 100	Flush-fitting headlamps
	A 110	Single-function lamps
	A 124	Automotive bulbs
	A 130	Packaging
	A 136	Bulbs range
	A 148	Bulb kits
Applications	**B 1.2**	Notes for users
	B 2	Vans, trucks, buses, agricultural and construction machinery
Cross-reference		
	C 2	Part numbers

The meaning of the symbols and the special cases in the application section (Section B) are explained at the end of the catalog.
For notes on using the application section, see page B 1.2.

Part-number overview

for Information section starting on page A4

	Type	
0 300 181 003	105 mm	A 94
0 301 007 101	285 x 154 mm	A 108
0 301 007 102	285 x 154 mm	A 108
0 301 017 003	273 x 172 mm	A 104
0 301 017 102	273 x 172 mm	A 104
0 301 017 112	273 x 172 mm	A 104
0 301 017 303	273 x 172 mm	A 104
0 301 019 100	200 x 142 mm	A 83
0 301 019 101	200 x 142 mm	A 83
0 301 019 800	200 x 142 mm	A 83
0 301 057 100	395 x 203 mm	A 105
0 301 057 101	395 x 203 mm	A 105
0 301 058 105	420 x 214 mm	A 106
0 301 058 106	420 x 214 mm	A 106
0 301 203 001	132 x 114 mm	A 100
0 301 204 002	132 x 114 mm	A 101
0 301 204 100	132 x 114 mm	A 101
0 301 204 101	132 x 114 mm	A 101
0 301 302 101	5¾″	A 86
0 301 302 102	5¾″	A 86
0 301 302 103	5¾″	A 85
0 301 303 034	5¾″	A 84
0 301 304 100	144 mm	A 95
0 301 305 100	92 x 150 mm	A 81
0 301 305 102	92 x 150 mm	A 82
0 301 305 104	92 x 150 mm	A 81
0 301 340 002	4 x 6″	A 77
0 301 600 015	7″	A 88
0 301 600 107	7″	A 87
0 301 600 110	7″	A 87
0 301 603 100	170 mm	A 97
0 301 611 002	170 mm	A 107
0 301 611 101	170 mm	A 107
0 301 680 101	160 mm	A 96
0 301 709 001	4 x 6″	A 79
0 301 709 100	4 x 6″	A 80
0 301 709 101	4 x 6″	A 80
0 301 709 102	4 x 6″	A 80
0 301 709 800	4 x 6″	A 80
0 301 710 100	200 x 142 mm	A 99
0 301 710 111	185 x 130 mm	A 103
0 301 711 101	170 x 100 mm	A 102
0 301 740 011	4 x 6″	A 76
0 301 740 012	4 x 6″	A 76
0 301 810 102	180 mm	A 98
0 302 300 003	5¾″	A 92
0 302 300 004	5¾″	A 92
0 302 300 005	5¾″	A 92
0 302 300 006	5¾″	A 92
0 302 601 008	7″	A 93
0 302 703 001	4 x 6″	A 91
0 302 703 002	4 x 6″	A 91
0 302 703 007	4 x 6″	A 90
0 302 703 008	4 x 6″	A 90
0 304 103 001	105 mm	A 94

	Type	
0 305 002 001	Rallye 225	A 28
0 305 055 001	Compact 100	A 32
0 305 055 002	Compact 100	A 32
0 305 055 004	Compact 100	A 32
0 305 055 901	Compact 100	A 32
0 305 115 001	4 x 6″	A 78
0 305 406 001	Pilot 150	A 35
0 305 406 002	Pilot 150	A 35
0 305 406 101	Pilot 150	A 35
0 305 406 102	Pilot 150	A 35
0 305 406 105	Pilot 150	A 35
0 305 406 901	Pilot 150	A 35
0 305 406 902	Pilot 150	A 35
0 305 555 001	Scout	A 36
0 305 555 901	Scout	A 36
0 305 601 004	Touring 170	A 34
0 305 601 104	Touring 170	A 34
0 305 602 001	Touring 165	A 30
0 305 602 002	Touring 165	A 30
0 305 603 001	Pilot 160	A 31
0 305 603 002	Pilot 160	A 31
0 305 603 901	Pilot 160	A 31
0 305 603 902	Pilot 160	A 31
0 305 900 005	Touring 190	A 29
0 306 003 001	Rallye 225	A 6
0 306 003 002	Rallye 225	A 6
0 306 003 003	Rallye 225	A 6
0 306 003 006	Rallye 225	A 6
0 306 003 007	Rallye 225	A 6
0 306 003 008	Rallye 225	A 6
0 306 003 009	Rallye 225	A 6
0 306 055 001	Compact 100	A 17
0 306 055 101	Compact 100	A 40
0 306 055 102	Compact 100 Leisure	A 41
0 306 055 901	Compact 100 Leisure	A 17
0 306 080 002	Profi 210	A 51
0 306 080 003	Profi 210	A 51
0 306 181 009	105	A 42
0 306 382 001	Kiruna 140	A 43
0 306 407 001	Pilot 150	A 22
0 306 407 002	Pilot 150	A 22
0 306 407 101	Pilot 150	A 22
0 306 407 901	Pilot 150	A 22
0 306 480 001	Touring 140	A 57
0 306 480 002	Touring 140	A 45
0 306 481 001	Pilot 140	A 44
0 306 481 002	Pilot 140	A 44
0 306 481 003	Pilot 140	A 56
0 306 481 004	Pilot 140	A 44
0 306 482 001	Pilot 145	A 49
0 306 482 003	Pilot 145	A 49
0 306 482 010	Pilot 145	A 49
0 306 483 001	140 x 65 mm	A 48
0 306 484 001	Pilot 150	A 50
0 306 484 002	Pilot 150	A 50

	Type	
0 306 604 001	Touring 170	A 23
0 306 605 001	Touring 165	A 15
0 306 606 001	Pilot 160	A 16
0 306 606 002	Pilot 160	A 16
0 306 606 901	Pilot 160	A 16
0 306 680 001	Pilot 160	A 46
0 306 901 005	Touring 190	A 12
0 306 980 002	Touring 190	A 47
0 306 980 003	Touring 190	A 47
0 306 980 004	Touring 190	A 58
0 307 400 001	140 x 65 mm	A 120
0 311 316 003	Turn-signal lamp for commercial vehicles	A 112
0 311 316 004	Turn-signal lamp for commercial vehicles	A 112
0 311 316 005	Turn-signal lamp for commercial vehicles	A 112
0 311 316 009	Turn-signal lamp for commercial vehicles	A 112
0 312 201 002	Stop lamp for commercial vehicles	A 111
0 312 201 003	Stop lamp for commercial vehicles	A 111
0 313 050 005	Tail lamp for commercial vehicles	A 113
0 313 050 006	Tail lamp for commercial vehicles	A 113
0 313 103 006	140 x 65 mm	A 120
0 313 106 003	170 x 85 mm	A 121
0 313 107 002	140 mm	A 122
0 313 108 001	90 x 75 mm	A 118
0 313 109 001	140 x 65 mm	A 119
0 313 110 002	Fog warning lamp for commercial vehicles	A 115
0 314 102 003	170 x 85 mm	A 121
0 314 104 002	140 mm	A 122
0 314 105 001	90 x 75 mm	A 118
0 314 106 001	140 x 65 mm	A 119
0 314 107 002	Backup lamp for commercial vehicles	A 116
0 314 107 003	Backup lamp for commercial vehicles	A 116
0 314 107 004	Backup lamp for commercial vehicles	A 116
0 315 104 006	Side-marker lamp	A 117
0 315 104 027	Side-marker lamp for commercial vehicles	A 114
0 315 109 003	Side-marker lamp	A 123
0 315 109 004	Side-marker lamp	A 123
0 986 310 520	Compass 1000	A 20
0 986 310 526	Navigator ECE	A 10
0 986 310 527	Navigator Pencil beam	A 11
0 986 310 528	Navigator ECE	A 10
0 986 310 529	Navigator Pencil beam	A 11
0 986 310 533	Rallye 175	A 14
0 986 310 534	Rallye 175	A 14
0 986 310 535	Compass 3000 off-road version	A 19
0 986 310 536	Compass 3000 HNS	A 18
0 986 310 537	Profi 210	A 24
0 986 310 538	Profi 210	A 24
0 986 310 539	Profi 210	A 33
0 986 310 540	Navigator LED	A 7

	Type	
0 986 310 541	Navigator LED	A 7
0 986 310 575	Navigator Xenon Pencil beam	A 8
0 986 310 576	Navigator Xenon ECE	A 9
0 986 310 670	Navigator Xenon ECE	A 9
0 986 310 674	Rallye 175 Xenon	A 13
0 986 310 675	Pilot X	A 52
0 986 310 676	Pilot X	A 52
0 986 310 920	Compass 1000 LIGHT BAR	A 21
1 300 334 908	Rallye 225	A 6
7 782 319 052	Floodlamp	A 71
7 782 319 054	Floodlamp	A 71
7 782 319 062	Floodlamp	A 71
7 782 319 064	Floodlamp	A 71
7 782 322 011	Rotating beacon	A 64
7 782 322 012	Rotating beacon	A 69
7 782 322 207	Rotating beacon	A 64
7 782 322 405	Rotating beacon	A 64
7 782 324 011	Rotating beacon	A 64
7 782 324 012	Rotating beacon	A 69
7 782 324 207	Rotating beacon	A 64
7 782 324 404	Rotating beacon	A 64
7 782 332 008	Rotating beacon	A 67
7 782 332 009	Rotating beacon	A 68
7 782 332 011	Rotating beacon	A 63
7 782 332 209	Rotating beacon	A 63
7 782 332 404	Rotating beacon	A 63
7 782 334 007	Rotating beacon	A 67
7 782 334 008	Rotating beacon	A 68
7 782 334 009	Rotating beacon	A 63
7 782 334 207	Rotating beacon	A 63
7 782 334 404	Rotating beacon	A 63
7 782 362 008	Rotating beacon	A 65
7 782 362 207	Rotating beacon	A 65
7 782 362 404	Rotating beacon	A 65
7 782 364 007	Rotating beacon	A 65
7 782 364 207	Rotating beacon	A 65
7 782 364 404	Rotating beacon	A 65
7 782 372 003	Rotating beacon	A 70
7 782 372 004	Rotating beacon	A 66
7 782 372 203	Rotating beacon	A 66
7 782 372 204	Rotating beacon	A 66
7 782 372 403	Rotating beacon	A 66
7 782 374 005	Rotating beacon	A 70
7 782 374 006	Rotating beacon	A 66
7 782 374 203	Rotating beacon	A 66
7 782 374 405	Rotating beacon	A 66

Auxiliary lamps – Driving lamps

Range overview

A20/21	**Compass 1000** – Driving lamp / **LIGHT BAR** – Driving-lamp set. Modern, die-cast aluminum housing. With HNS reflector for the most difficult lighting conditions. Multi-purpose mounting, for any vehicle.	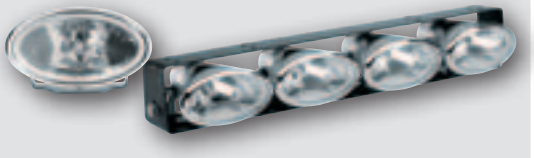
A18/19	**Compass 3000** – Driving lamp. Contemporary design, in halogen version. Weather-resistant plastic housing.	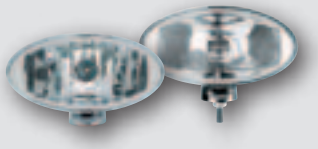
A7/8/9 **A10/11**	**Navigator** – Driving lamp with stainless-steel housing and colorless lens. Ideally suited for emergency vehicles, commercial vehicles, off-road vehicles or as a spot lamp. Also available with blue lens. Available with LED ring or Xenon technology.	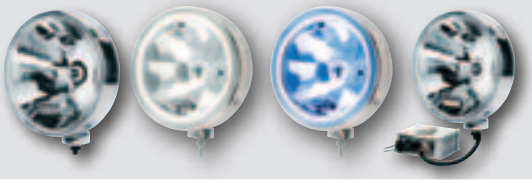
A17	**Compact 100** – Small driving lamp with latest-generation lighting engineering and colorless lens. Ideally suited for integrated external fitting and flush fitting. Also available as a fog lamp.	
A16/22	**Pilot** – Driving lamp. Extra-flat housing. Specially designed for mounting on narrow bumpers. Version without mounting base is suitable for installation in spoiler or radiator grille. Also available as a fog lamp.	
A12/15/23	**Touring** – Driving lamp. Version without mounting base is suitable for installation in spoiler or radiator grille. Also available as a fog lamp.	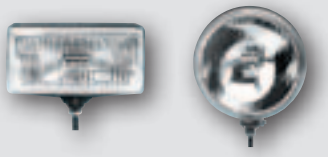
A6/13/14	**Rallye** – Driving lamp. Exceptionally high lighting efficiency thanks to large and deep reflector. Tried and tested in motor sport. Also available in Xenon technology and as a fog lamp.	
A24	**Profi** – Driving lamp. Robust and resistant to vibration. Ideal for tough day-to-day use on commercial vehicles. Also available as a fog lamp.	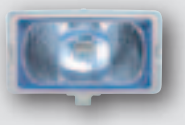

Information



The optical principle of driving lamps is similar to that of fog lamps. However, the lens is designed to meet the technical requirements for high beam. Here too, the regulations for mounting and adjustment as well as the adjustment dimensions and statutory regulations must always be adhered to.

Rallye 225

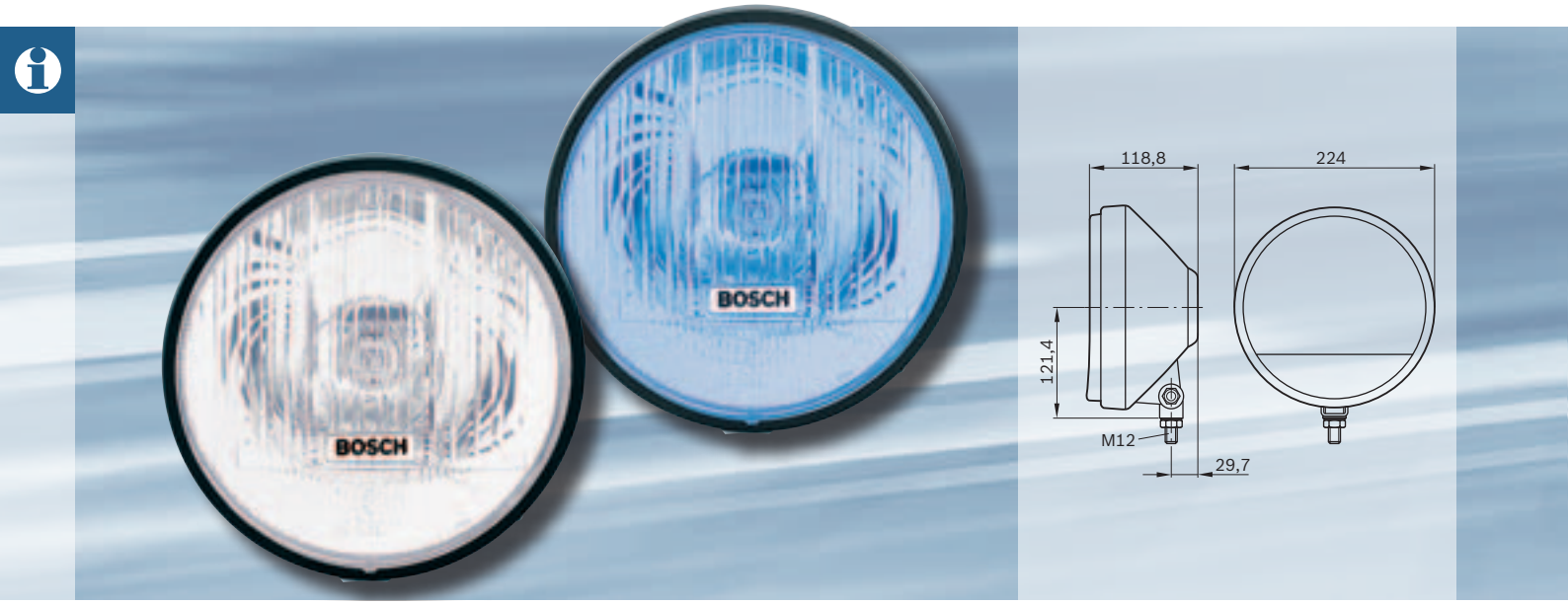

Robust auxiliary lamp – developed for rally sport. Optimum light and best road illumination for heavy-duty applications. With or without side- marker lamp.

Headlamp housing
Waterproof steel housing, black resicoated.

Lens
Colorless or blue. Lens aperture Ø 205 mm.

Attachment
With M12 threaded stud.

Mounting
Upright.

Assembly parts
Included in scope of delivery.

Standard
Observe legal regulations and safety instructions.

Driving lamp 12 V/55 W

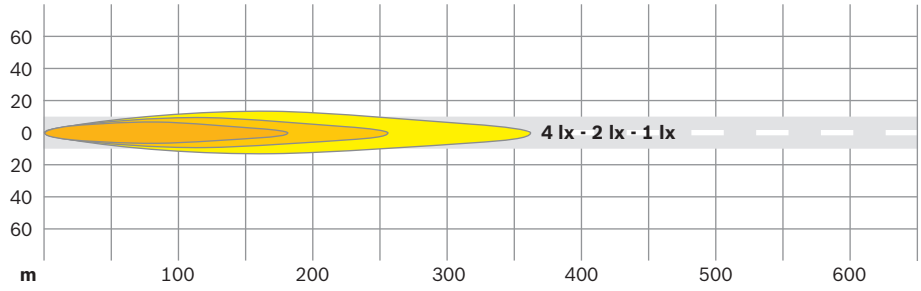

Rallye 225	
Without E-approval with protective cap	**0 306 003 001**
Colorless, without side-marker lamp	**0 306 003 002**
Colorless, with side-marker lamp	**0 306 003 006**
Blue, with side-marker lamp	**0 306 003 008**[3]
Colorless, with pencil beam	**0 306 003 003**[1)2)]
Colorless, with Pencil beam and side-marker lamp	**0 306 003 007**
Blue, with pencil beam and side-marker lamp	**0 306 003 009**[1]

Type of bulb		
H3	12 V/55 W	**1 987 302 031**
H3	24 V/70 W	**1 987 302 431**
T 4 W	12 V/4 W	**1 987 302 207**
T 4 W	24 V/4 W	**1 987 302 512**

Accessories and spare parts	
Protective cap	**1 300 516 018**[1]
Unit with Pencil beam	**1 300 334 908**
Driving-lamp unit, colorless, without side-marker lamp	**1 305 334 910**

[1] Observe legal regulations and safety instructions.
[2] Available while stocks last.
[3] Operate blue ECE version with colorless bulbs only, T4W, H1.

Navigator LED



Stylish stainless-steel housing. Ideal for commercial vehicles and off-road vehicles.

Headlamp housing
Stainless-steel housing in V4A steel.

Lens
Colorless or blue.

Mounting
Optionally upright or suspended.

Scope of delivery
1 headlamp with protective cap, electrical connecting parts, operating instructions.

Standard
ECE approval.

Driving lamp 12 V/55 W

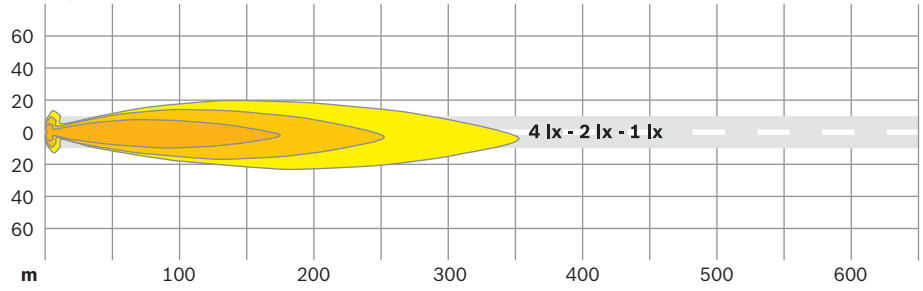

Navigator LED	
ECE, colorless	**0 986 310 540**
ECE, blue	**0 986 310 541**[2)]

Accessories and spare parts	
ECE driving-lamp unit, colorless	**1 987 305 106**
ECE driving-lamp unit, blue	**1 987 305 107**[2)]
Protective cap, black	**1 987 305 095**[1)]

Type of bulb		
H1	12 V/55 W	**1 987 302 011**
H1	12 V/100 W	**1 987 302 016**[1)]
H1	24 V/70 W/70 W	**1 987 302 411**

[1)] Observe legal regulations and safety instructions.
[2)] Operate blue ECE version with colorless bulbs only, T4W, H1.

Navigator Xenon pencil beam



Stylish stainless-steel housing.
For off-road vehicles, commercial vehicles, emergency vehicles (spot lamp).

Headlamp housing
Stainless-steel housing in V4A steel.

Lens
Colorless

Mounting
Optionally upright or suspended.

Electrical connection
Xenon control unit already pre-mounted.

Scope of delivery-
1 headlamp with protective cap, gaseous-discharge lamp D2S, control unit, complete wiring-harness set with relay and side-marker lamp T4W, operating instructions.

Standard
Observe legal regulations and safety instructions.

Pencil beam / Xenon driving lamp

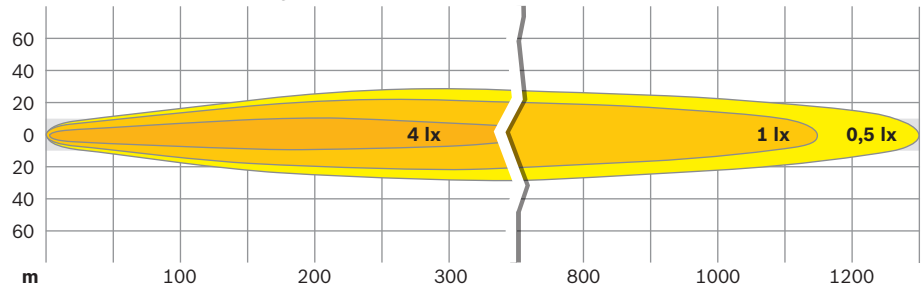

Navigator Xenon pencil beam	
Pencil beam, colorless 12 V	**0 986 310 575**[1)]

Accessories and spare parts	
Pencil beam driving-lamp unit, colorless Xenon	**1 987 305 065**[1)]
Wiring-harness set without relay	**1 987 305 104**
Protective cap, black	**1 987 305 095**[1)]
Xenon control unit with 50 cm high-voltage cable	
12 V	**0 986 310 200**
24 V	**0 986 310 202**
Relay 12 V	**0 332 019 150**
Relay 24 V	**0 332 019 203**

Type of bulb	
Gaseous-discharge lamp D2S/35 W	**1 987 302 904**
T 4 W 12 V/4 W	**1 987 302 287**
T 4 W 24 V/4 W	**1 987 302 525**

[1)] Observe legal regulations and safety instructions.

Navigator Xenon ECE



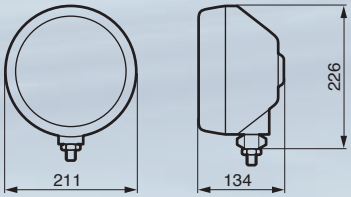

Stylish stainless-steel housing.
For off-road vehicles, commercial vehicles, emergency vehicles (spot lamp).

Headlamp housing
Stainless-steel housing in V4A steel.

Lens
Colorless or blue.

Mounting
Optionally upright or suspended.

Electrical connection
Xenon control unit already pre-mounted.

Scope of delivery
1 headlamp with protective cap, gaseous-discharge lamp D2S, control unit, complete wiring-harness set with relay and side-marker lamp T4W, operating instructions.

Standard
ECE approval.

ECE/Xenon driving lamp

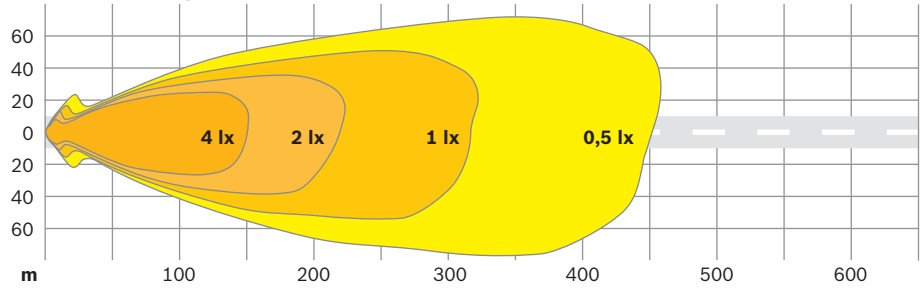

Navigator Xenon ECE	
ECE, colorless 12 V	**0 986 310 576**
ECE, blue 12 V	**0 986 310 670**[2)]

Accessories and spare parts	
ECE driving-lamp unit, colorless Xenon	**1 987 305 068**
ECE driving-lamp unit, blue Xenon	**1 987 305 070**[2)]
Wiring-harness set without relay	**1 987 305 104**
Protective cap, black	**1 987 305 095**[1)]
Xenon control unit with 50 cm high-voltage cable	
12 V	**0 986 310 200**
24 V	**0 986 310 202**
Relay 12 V	**0 332 019 150**
Relay 24 V	**0 332 019 203**

Type of bulb	
Gaseous-discharge lamp D2S/35 W	**1 987 302 904**
T 4 W 12 V/4 W	**1 987 302 287**
T 4 W 24 V/4 W	**1 987 302 525**

[1)] Observe legal regulations and safety instructions.
[2)] Operate blue ECE version with colorless bulbs only, T4W, H1.

Navigator ECE



Stylish stainless-steel housing. Ideal for commercial vehicles and off-road vehicles.

Headlamp housing
Stainless-steel housing in V4A steel.

Lens
Colorless or blue.

Mounting
Optionally upright or suspended.

Scope of delivery
1 headlamp with protective cap, socket for side-marker lamp, electrical connecting parts, operating instructions.

Standard
ECE approval.

Driving lamp ECE 12 V/55 W

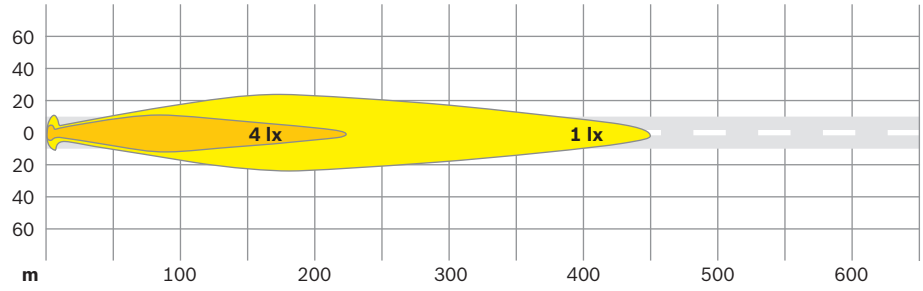

Navigator ECE	
ECE, colorless	**0 986 310 526**
ECE, blue	**0 986 310 528**[2)]

Accessories and spare parts	
ECE driving-lamp unit, colorless	**1 987 305 066**
ECE driving-lamp unit, blue	**1 987 305 072**[2)]
Protective cap, black	**1 987 305 095**[1)]

Type of bulb		
H1	12 V/55 W	**1 987 302 011**
H1	12 V/100 W	**1 987 302 016**[1)]
H1	24 V/70 W/75 W	**1 987 302 411**
T 4 W	12 V/4 W	**1 987 302 287**
T 4 W	24 V/4 W	**1 987 302 525**

[1)] Observe legal regulations and safety instructions.
[2)] Operate blue ECE version with transparent bulbs only, T4W, H1.

Navigator pencil beam



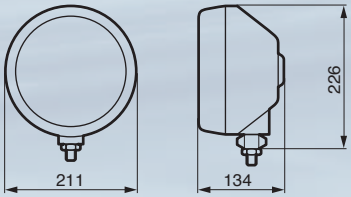

Stylish stainless-steel housing. Ideal for commercial vehicles and off-road vehicles.

Headlamp housing
Stainless-steel housing in V4A steel.

Lens
Colorless or blue.

Mounting
Optionally upright or suspended.

Scope of delivery
1 headlamp with protective cap, socket for side-marker lamp, electrical connecting parts, operating instructions.

Standard
Observe legal regulations and safety instructions.

Pencil-beam driving lamp 12 V/55 W

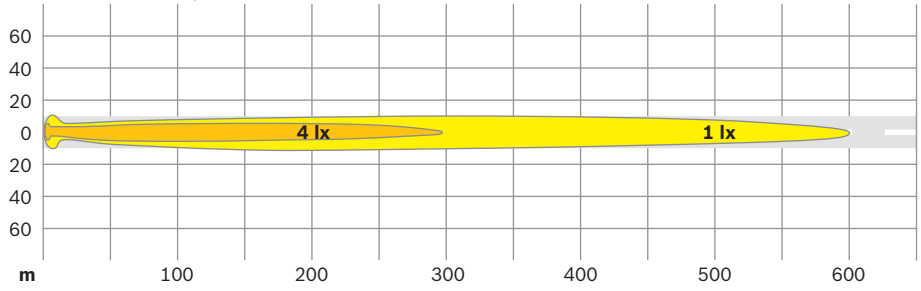

Navigator pencil beam	
Pencil beam, colorless	**0 986 310 527**[1)]
Pencil beam, blue	**0 986 310 529**[1)]

Accessories and spare parts	
Pencil-beam driving-lamp unit, colorless	**1 987 305 065**[1)]
Pencil-beam driving-lamp unit, blue	**1 987 305 069**[1)]
Protective cap, black	**1 987 305 095**[1)]

Type of bulb		
H1	12 V/55 W	**1 987 302 011**
H1	12 V/100 W	**1 987 302 016**[1)]
H1	24 V/70 W/75 W	**1 987 302 411**
T 4 W	12 V/4 W	**1 987 302 287**
T 4 W	24 V/4 W	**1 987 302 525**

[1)] Observe legal regulations and safety instructions.

Touring 190

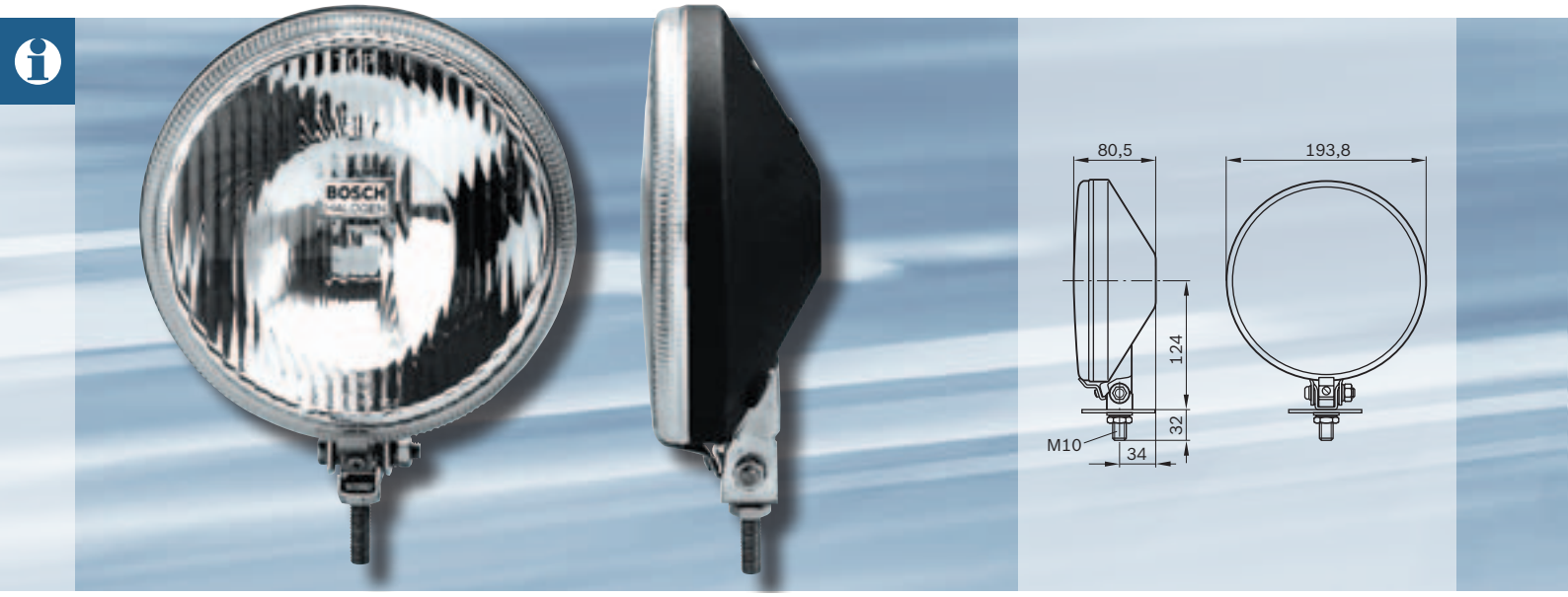

Auxiliary lamp made of steel in exceptionally flat design. Scratch and corrosion-resistant.

Headlamp housing
Waterproof steel housing, black resicoated.

Lens
Colorless.

Attachment
With M10 threaded stud.

Mounting
Upright.

Standard
ECE approval.

Driving lamp 12 V/55 W

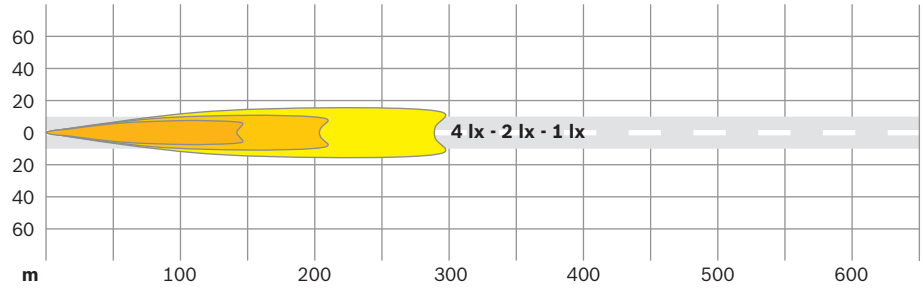

Touring 190	
Colorless	**0 306 901 005**

Accessories and spare parts	
Protective cap	**1 300 502 012**[1)]
Driving-lamp unit, colorless	**1 305 313 938**

Type of bulb		
H3	12 V/55 W	**1 987 302 031**
H3	24 V/70 W	**1 987 302 431**

[1)] Observe legal regulations and safety instructions.

Rallye 175 Xenon



Auxiliary lamp for a wide variety of applications. Optimum homogeneous light distribution. Suitable for use in even the toughest of weather conditions.

Headlamp housing
Fiberglass reinforced plastic, matte black surface.

Lens
Colorless.

Attachment
With M10 threaded stud.

Mounting
Upright, suspended and side-mounted with up to 90° adjustable base.

Scope of delivery
SB packaging, 1 headlamp with D1S gaseous-discharge lamp, control unit, electrical connecting parts, operating instructions.

Standard
ECE approval.

Driving lamp 12 V/55 W / Xenon

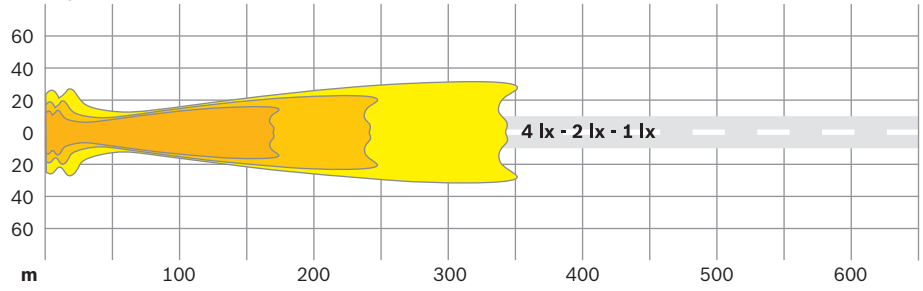

Rallye 175 Xenon	
Colorless 12 V	**0 986 310 674**

Accessories and spare parts	
Headlight unit, colorless	**1 987 305 076**
Xenon control unit with 80 cm high-voltage cable 12 V	**0 986 310 208**
Relay 12 V	**0 332 019 150**

Type of bulb	
Gaseous-discharge lamp D1S, 35 W	**1 987 302 905**

Rallye 175



Auxiliary lamp for a wide variety of applications. Optimum homogeneous light distribution. Suitable for use in even the toughest of weather conditions.

Headlamp housing
Fiberglass reinforced plastic, matte black surface.

Lens
Colorless or blue.

Attachment
With M10 threaded stud.

Mounting
Upright, suspended and side-mounted with up to 90° adjustable base.

Scope of delivery
SB packaging, 1 headlamp with H1 halogen lamp, electrical connecting parts, operating instructions.

Standard
ECE and SAE approval.

Driving lamp 12 V/55 W

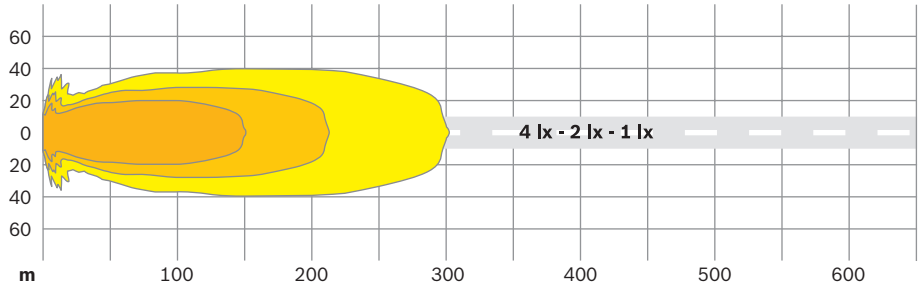

Rallye 175	
Colorless	**0 986 310 533**
Blue	**0 986 310 534**[1)]

Accessories and spare parts	
Headlight unit, colorless	**1 987 305 074**
Headlight unit, blue	**1 987 305 075**[1)]

Type of bulb		
H1	12 V/55 W	**1 987 302 011**
H1	24 V/70 W	**1 987 302 411**
T 4 W	12 V/4 W	**1 987 302 207**
T 4 W	24 V/4 W	**1 987 302 512**

[1)] Operate blue ECE version with colorless bulbs only, T4W, H1.

Touring 165



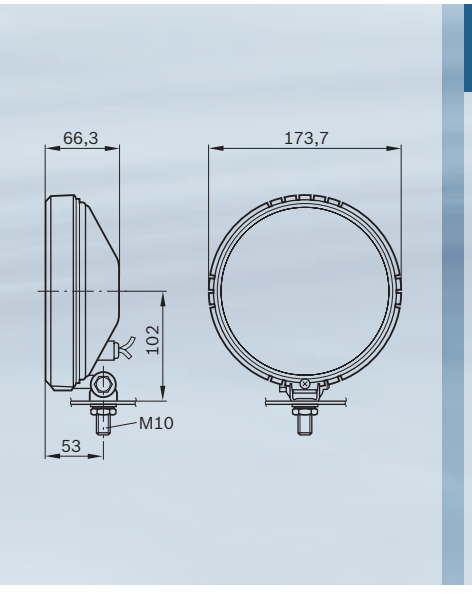

Flat auxiliary lamp for better visibility in fog, rain and snow. Impact-resistant, fracture-proof and non-corroding.

Headlamp housing
Fiberglass reinforced polyamide housing, matte black surface.

Lens
Colorless.

Attachment
With M10 threaded stud.

Mounting
Optionally upright or suspended.

Standard
ECE approval.

Driving lamp 12 V/55 W

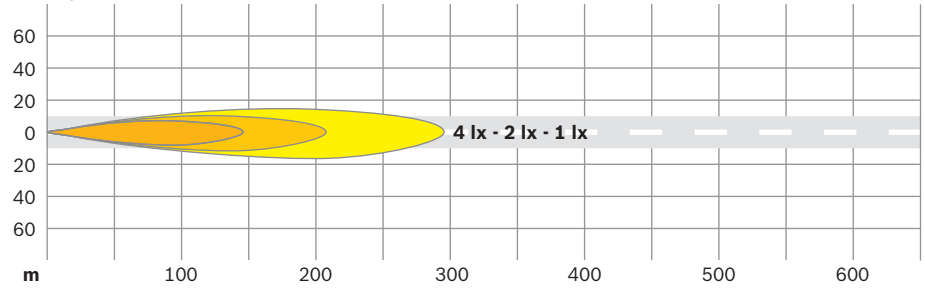

Touring 165	
Colorless	**0 306 605 001**

Accessories and spare parts	
Protective cap	**1 300 516 017**[1)]

Type of bulb		
H3	12 V/55 W	**1 987 302 031**
H3	24 V/70 W	**1 987 302 431**

[1)] Observe legal regulations and safety instructions.

Pilot 160

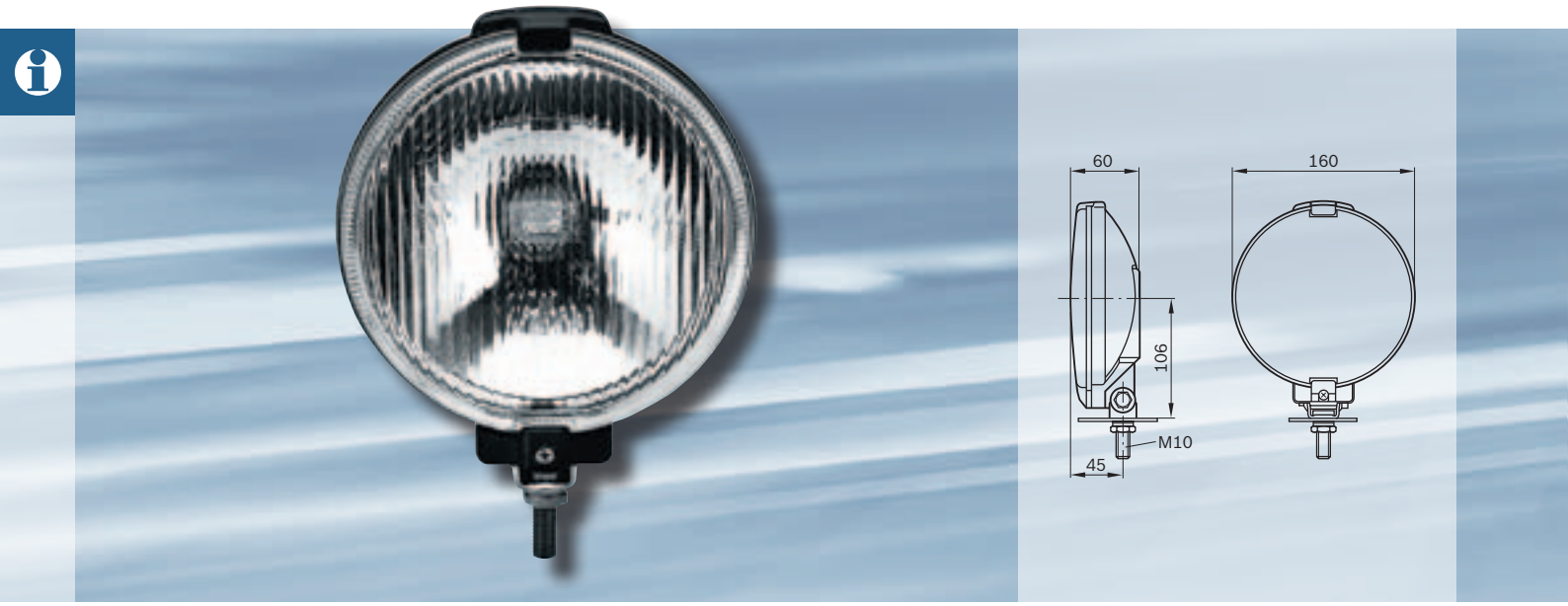

The all-rounder for additional mounting as a driving lamp.

Headlamp housing
Fiberglass reinforced polyamide housing, matte black surface.

Lens
Colorless.

Attachment
With M10 threaded stud.

Mounting
Optionally upright or suspended.

Scope of delivery
☐ SB packaging: Complete installation kit, 2 headlamps with H3 bulbs, wiring harness, relay, fuse carrier, assembly parts and installation instructions.

Standard
ECE approval.

Driving lamp 12 V/55 W

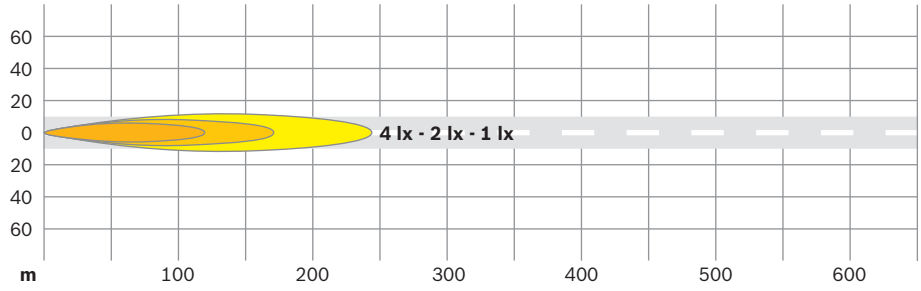

Pilot 160	
Colorless	**0 306 606 001**
yellow	**0 306 606 002**
SB packaging	**0 306 606 901** ☐

Accessories and spare parts	
Protective cap	**1 300 516 024**[1)]
Protective grille	**1 305 501 153**
Driving-lamp unit, colorless	**1 305 334 915**
Holder for unit, transparent	**1 301 091 004**

Type of bulb		
H3	12 V/55 W	**1 987 302 031**
H3	24 V/70 W	**1 987 302 431**

[1)] Observe legal regulations and safety instructions.

Compact 100



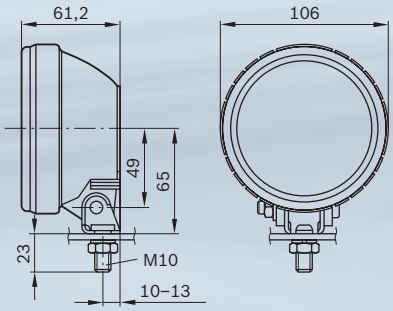

Power that's well worth seeing. Longer range, enhanced road illumination for earlier detection of obstacles. A better view at dusk and at night.

Headlamp housing
Fiberglass reinforced polyamide housing, matte black surface. Waterproof ventilation system with GORE-TEX® membrane.

Lens
Colorless.

Mounting
Optionally upright or suspended.

Scope of delivery
☐ SB packaging: Complete installation kit, 2 headlamps with H3 bulbs 12 V/55 W, wiring harness, relay, fuse carrier, switch, assembly parts and installation instructions.

Standard
ECE approval.

Driving lamp 12 V/55 W

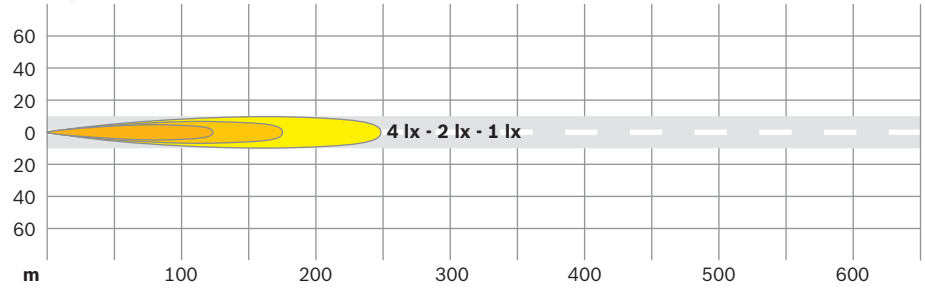

Compact 100	
Colorless	**0 306 055 001**
SB packaging	**0 306 055 901** ☐

Accessories and spare parts	
Driving-lamp unit, colorless	**1 305 300 924**
Holding ring	**1 305 520 010**

Type of bulb		
H3	12 V/55 W	**1 987 302 031**

Compass 3000 HNS



Maximum luminous efficiency thanks to computer-calculated HNS reflector technology and clear lens for homogeneous light distribution and a perfect view.

Headlamp housing
High-quality plastic housing, painted in silver. Die-cast aluminum reflector.

Lens
Colorless. Plastic in accordance with ECE.

Mounting
Optionally upright or suspended.

Scope of delivery
1 headlamp with black protective cap, 1 H1 halogen lamp, electrical connecting parts and operating instructions.

Standard
ECE approval.

Driving lamp ECE 12 V/55 W

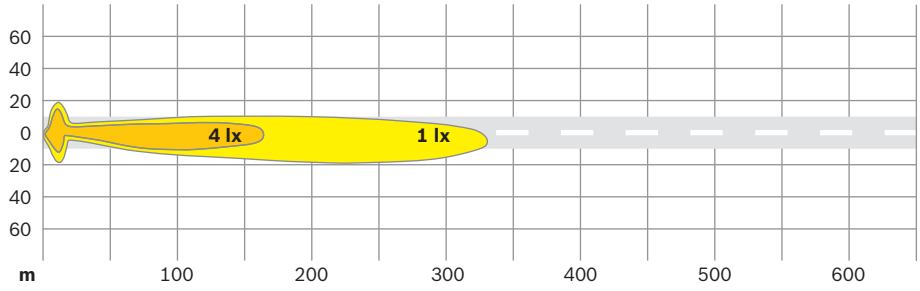

Compass 3000 HNS	
ECE, colorless	**0 986 310 536**

Accessories and spare parts	
ECE driving lamp unit, colorless	**1 987 305 060**
Protective cap, black	**1 987 305 090**[1)]
Protective cap, colorless, ECE	**1 987 305 091**[1)]
Protective cap, blue	**1 987 305 093**[1)]

Type of bulb		
H1	12 V/55 W	**1 987 302 011**

[1)] Observe legal regulations and safety instructions.

Compass 3000 off-road version



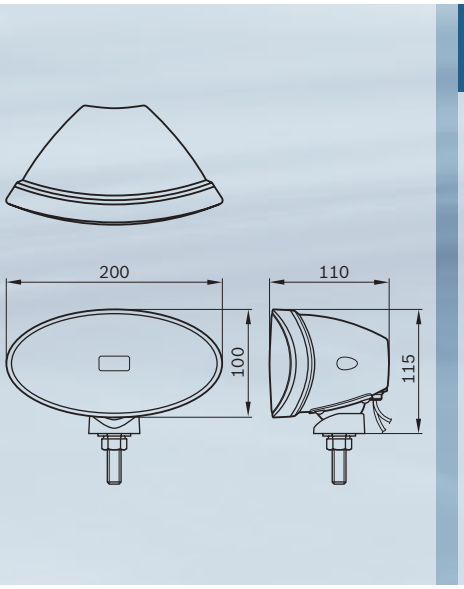

Headlamp housing
High-quality plastic housing, painted in silver. Die-cast aluminum reflector.

Lens
Colorless. Plastic in accordance with ECE.

Mounting
Optionally upright or suspended.

Scope of delivery
1 headlamp with black protective cap, 1 H1 halogen lamp, electrical connecting parts and operating instructions.

Standard
Observe legal regulations and safety instructions.

Pencil-beam driving lamp 12 V/55 W

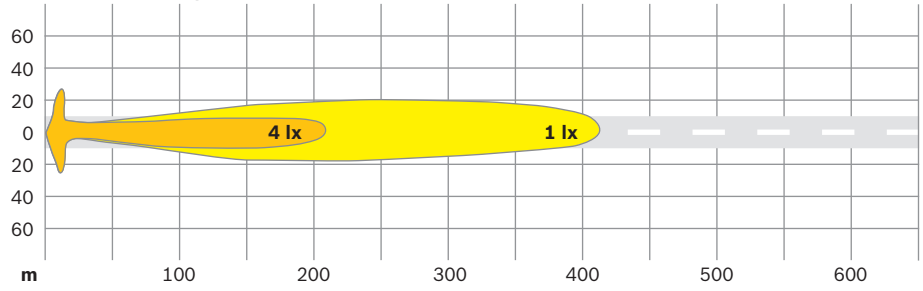

Compass 3000 off-road version	
Pencil beam, colorless	**0 986 310 535**[1)]

Accessories and spare parts	
Pencil-beam driving-lamp unit	**1 987 305 063**[1)]
Protective cap, black	**1 987 305 090**[1)]
Protective cap, colorless, ECE	**1 987 305 091**[1)]
Protective cap, blue	**1 987 305 093**[1)]

Type of bulb		
H1	12 V/55 W	**1 987 302 011**

[1)] Observe legal regulations and safety instructions.

Compass 1000



High-quality die-cast aluminum housing in trendy design. Maximum luminous efficiency thanks to HNS reflector technology. Small dimensions for flexible mounting on any vehicle – stainless-steel carrier.

Headlamp housing
High-quality die-cast aluminum housing, painted in silver.

Attachment
Using bracket.

Lens
Colorless.

Mounting
Optionally upright or suspended.

Scope of delivery
Workshop packaging: 1 headlamp with H1 halogen lamp, electrical connecting parts.

Standard
ECE approval.

Driving lamp 12 V/55 W

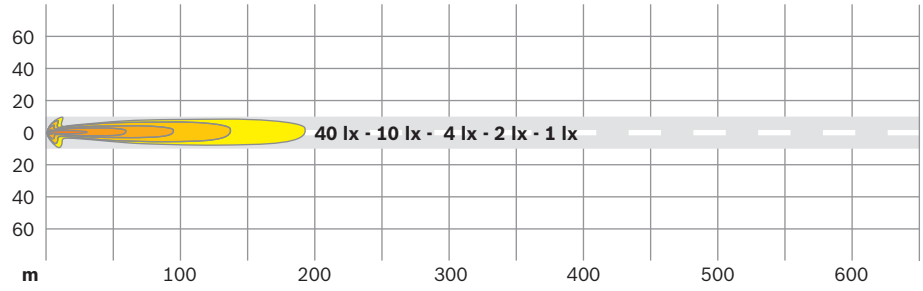

Compass 1000	
Colorless	**0 986 310 520**

Type of bulb		
H1	12 V/55 W	**1 987 302 011**

Compass 1000 LIGHT BAR



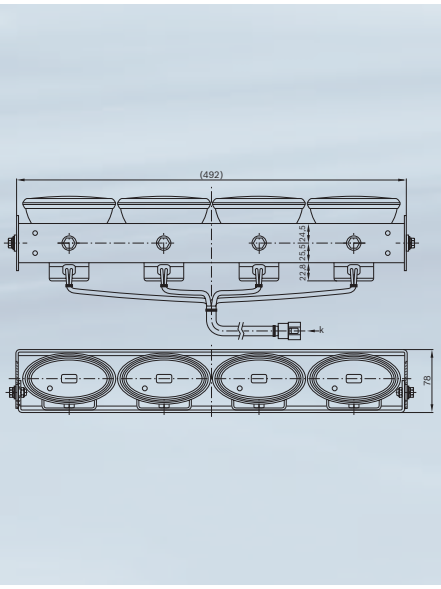

Bundled light output from pre-assembled 4-set. Optimum road illumination – even in extremely difficult visibility – thanks to individually adjustable driving lamps. Up-to-date design. HNS reflector technology. Flexible mounting on any vehicle.

Headlamp housing
High-quality die-cast aluminum housing, painted in silver.

Lens
Colorless.

Attachment
With stainless-steel screws and nuts. Assembly using 2 stabilizing carriers. Variable mounting possible thanks to adjustable frame.

Mounting
Optionally upright or suspended.

Electrical connection
Pre-assembled wiring.

Scope of delivery
SB packaging: 4 pre-assembled headlamps with assembly frame and wiring, 4 H1 halogen lamps, electrical connecting parts, 2 stability rods, 2 brackets, operating instructions.

Standard
Observe legal regulations and safety instructions.

Driving lamp 12 V/55 W

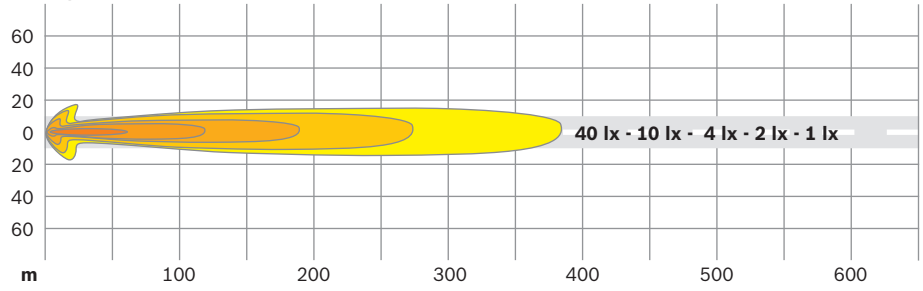

Compass 1000 LIGHT BAR	
Colorless	**0 986 310 920**

Type of bulb		
H1	12 V/55 W	**1 987 302 011**

Pilot 150



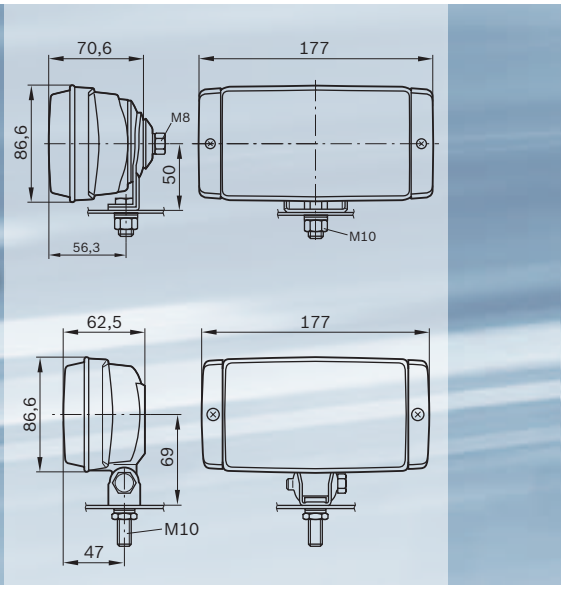

Extra-flat auxiliary lamp for vehicles with narrow bumper. Ideal for compact-class vehicles. Impact-resistant, fracture-proof and non-corroding.

Headlamp housing
Fiberglass reinforced polyamide housing, matte black surface.

Lens
Colorless or yellow.

Mounting
Optionally upright, suspended and from rear.

Scope of delivery
☐ SB packaging: Complete installation kit, 2 headlamps with H3 bulbs, wiring harness, relay, fuse carrier, switch, assembly parts and installation instructions (driving lamp without switch).

Standard
ECE approval.

Driving lamp 12 V/55 W

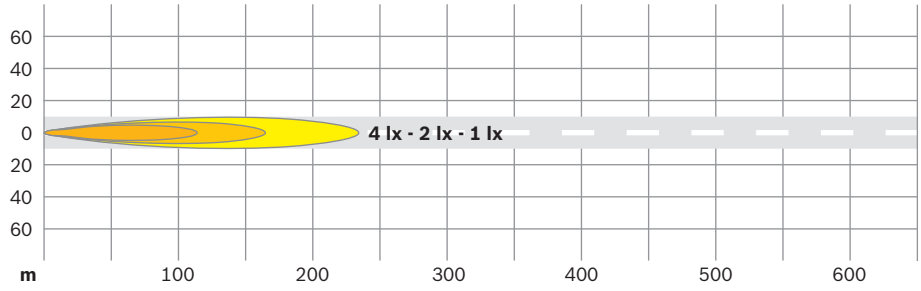

Pilot 150	
Colorless	**0 306 407 101**
Attachment with threaded stud	
Colorless	**0 306 407 001**
SB packaging	**0 306 407 901** ☐

Accessories and spare parts	
Protective cap	**1 300 591 096**[1)]
Guard	**1 305 540 165**
Driving-lamp unit, colorless	**1 305 354 935**
Holder for unit, colorless	**1 301 091 002**
Fastening screw	**2 918 140 027**

Type of bulb		
H3	12 V/55 W	**1 987 302 031**
H3	24 V/70 W	**1 987 302 431**

[1)] Observe legal regulations and safety instructions.

Touring 170



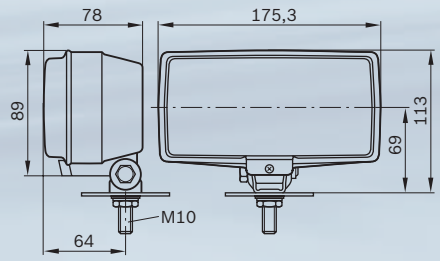

Medium-sized auxiliary lamp.
For mounting on roof and bumper. Impact-resistant, fracture-proof and non-corroding.

Headlamp housing
Fiberglass reinforced polyamide housing, matte black surface.

Lens
Colorless or yellow.

Attachment
With M10 threaded stud.

Mounting
Optionally upright or suspended.

Standard
ECE approval.

Driving lamp 12 V/55 W

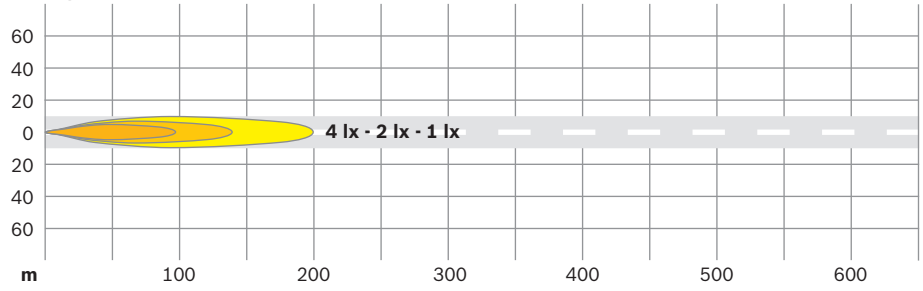

Touring 170	
Colorless	**0 306 604 001**

Accessories and spare parts	
Protective cap	**1 300 591 049**[1)]
Driving-lamp unit, colorless	**1 305 354 913**
Hinged grommet	**1 300 312 010**

Type of bulb		
H3	12 V/55 W	**1 987 302 031**
H3	24 V/70 W	**1 987 302 431**

[1)] Observe legal regulations and safety instructions.

Profi 210

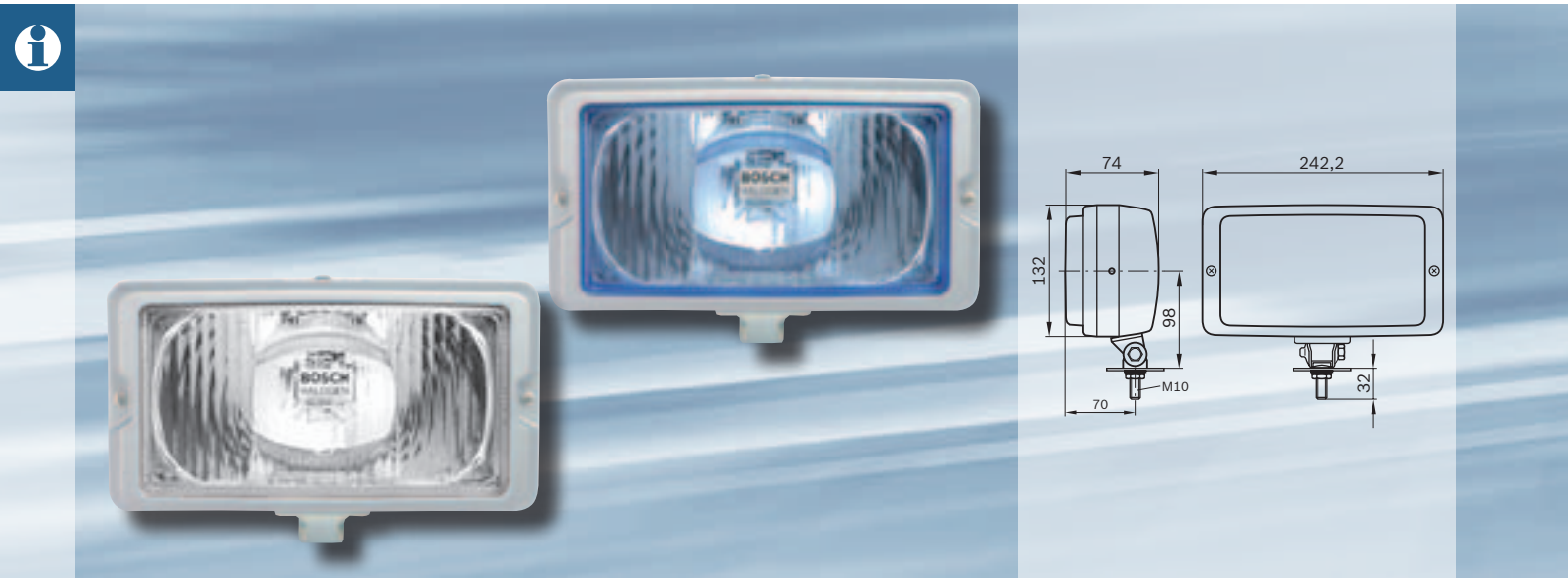

Auxiliary lamp in steel housing. Robust and vibration-resistant. Scratch-resistant and non-corroding. Ideal for trucks and buses.

Headlamp housing
Waterproof steel housing. Version with yellow lens: Black resicoated housing.

Lens
Colorless, yellow or blue.

Attachment
With 2 screws at side or pivoting fastening bracket with M 10 threaded stud.

Mounting
Upright and suspended.

Standard
ECE approval.

Driving lamp 12 V/55 W

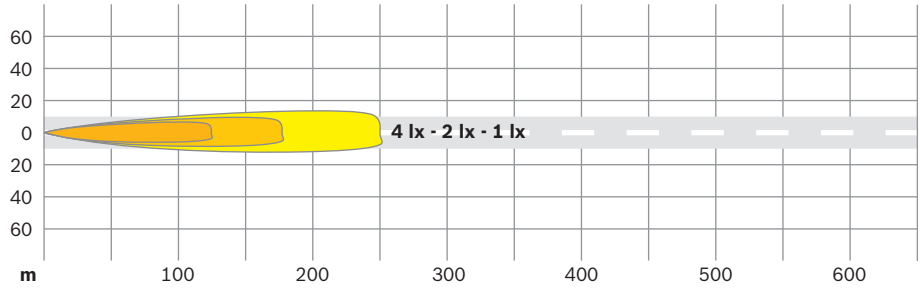

Profi 210	
Attachment using pivoting fastening bracket with M10 threaded stud	
Colorless	**0 986 310 537**
Blue	**0 986 310 538**

Accessories and spare parts	
Protective cap	**1 300 591 053**[1)]
Driving-lamp unit, colorless	**1 305 320 818**

Type of bulb		
H3	12 V/55 W	**1 987 302 031**
H3	24 V/70 W	**1 987 302 431**

[1)] Observe legal regulations and safety instructions.

Auxiliary lamps – Fog lamps

Range overview

A 32	**Compact 100** – Small fog lamp with the latest-generation lighting engineering and colorless lens. Ideally suited for integrated mounting and installation. Also available as a driving lamp.	
A 31/35	**Pilot** – Fog lamp. Extra-flat housing. Specially designed for mounting on narrow bumpers. Version without mounting base is suitable for installation in spoiler or radiator grille. Also available as a driving lamp.	
A 36	**Scout** Small but high-performance fog lamp for mounting and installation in body opening.	
A 29/30/34	**Touring** – Fog lamp. Version without mounting base is suitable for installation in spoiler or radiator grille. Also available as a driving lamp.	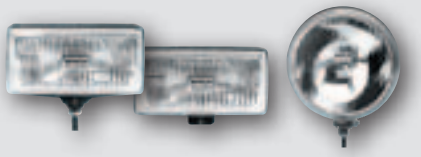
A 28	**Rallye** – Fog lamp. Exceptionally high lighting efficiency thanks to large and deep reflector. Tried and tested in motor sport. Also available as a driving lamp.	
A 33	**Profi** – Fog lamp. Robust and resistant to vibration. Ideal for tough day-to-day use on commercial vehicles. Also available as a driving lamp.	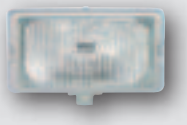

Information



A total of two additional front fog lamps are permissible on each vehicle. These must be capable of being switched on and off separately from the upper and lower-beam headlamps. They may only be switched on together with the lower-beam headlamps. Adjustment is as for the main headlamps. Adjustment dimensions and statutory regulations must always be adhered to.

There are three different optical principles for additional fog lamps:

Paraboloid
A parabolic reflector reflects paraxial light (such as upper beam), which is drawn out into a horizontal band by the lens. A screen restricts the upward radiation of light.

Free-form technology
Using computer-aided calculation methods (CAL technology), reflectors are designed to scatter the light directly and at the same time produce a sharply defined light-dark cutoff. The design of the bulb surround ensures an extremely high light volume with maximum diffusion.

PES fog lamps
In fog, this technology ensures a minimum of dazzle for the driver from his/her own lamps. The lens helps to ensure the best-possible light-dark cutoff contrast on the road.

Rallye 225

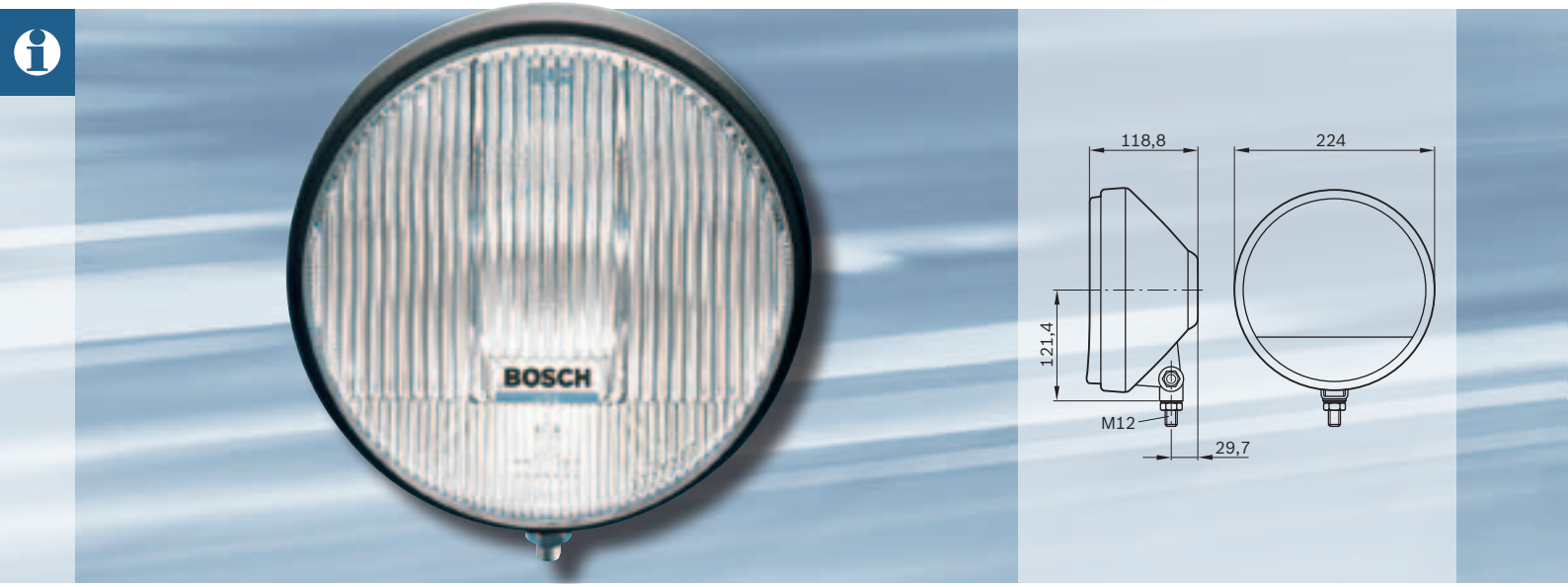

Robust auxiliary lamp – developed for rally sport. Optimum light and best road illumination for heavy-duty applications.

Headlamp housing
Waterproof steel housing, black resicoated.

Lens
Colorless. Lens aperture Ø 205 mm.

Attachment
With M12 threaded stud.

Mounting
Upright.

Scope of delivery
Assembly parts included.

Fog lamp 12 V/55 W

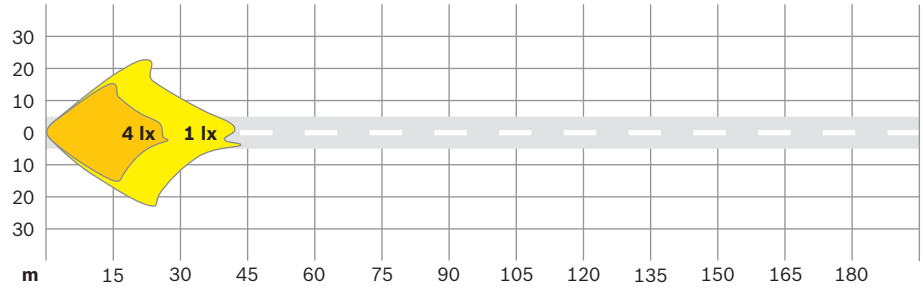

Rallye 225	
Colorless	**0 305 002 001**

Accessories and spare parts	
Protective cap	**1 300 516 018**[1)2)]
Fog-lamp unit, colorless	**1 305 334 911**

Type of bulb		
H3	12 V/55 W	**1 987 302 031**
H3	24 V/70 W	**1 987 302 431**
T 4 W	12 V/4 W	**1 987 302 207**
T 4 W	24 V/4 W	**1 987 302 512**

[1)] Observe legal regulations and safety instructions.
[2)] Available while stocks last.

Touring 190



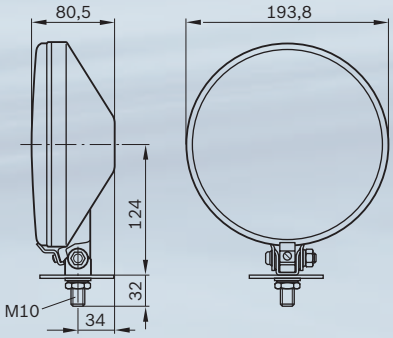

Auxiliary lamp made of steel in exceptionally flat design. Scratch-resistant and non-corroding.

Headlamp housing
Waterproof steel housing, black resicoated.

Lens
Colorless.

Attachment
With M10 threaded stud.

Mounting
Upright.

Fog lamp 12 V/55 W

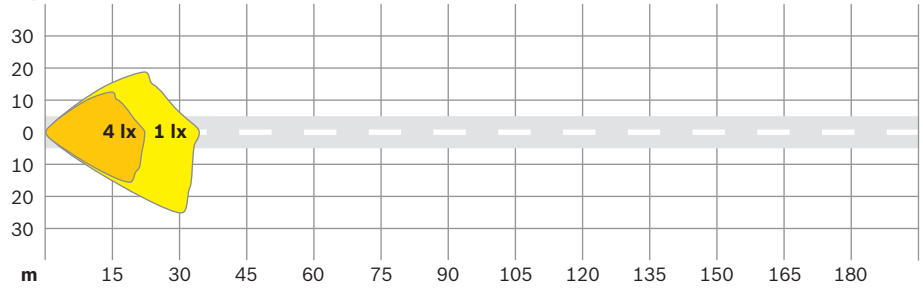

Touring 190	
Colorless	**0 305 900 005**

Accessories and spare parts	
Protective cap	**1 300 502 012**[1)]

Type of bulb		
H3	12 V/55 W	**1 987 302 031**
H3	24 V/70 W	**1 987 302 431**

[1)] Observe legal regulations and safety instructions.

Touring 165

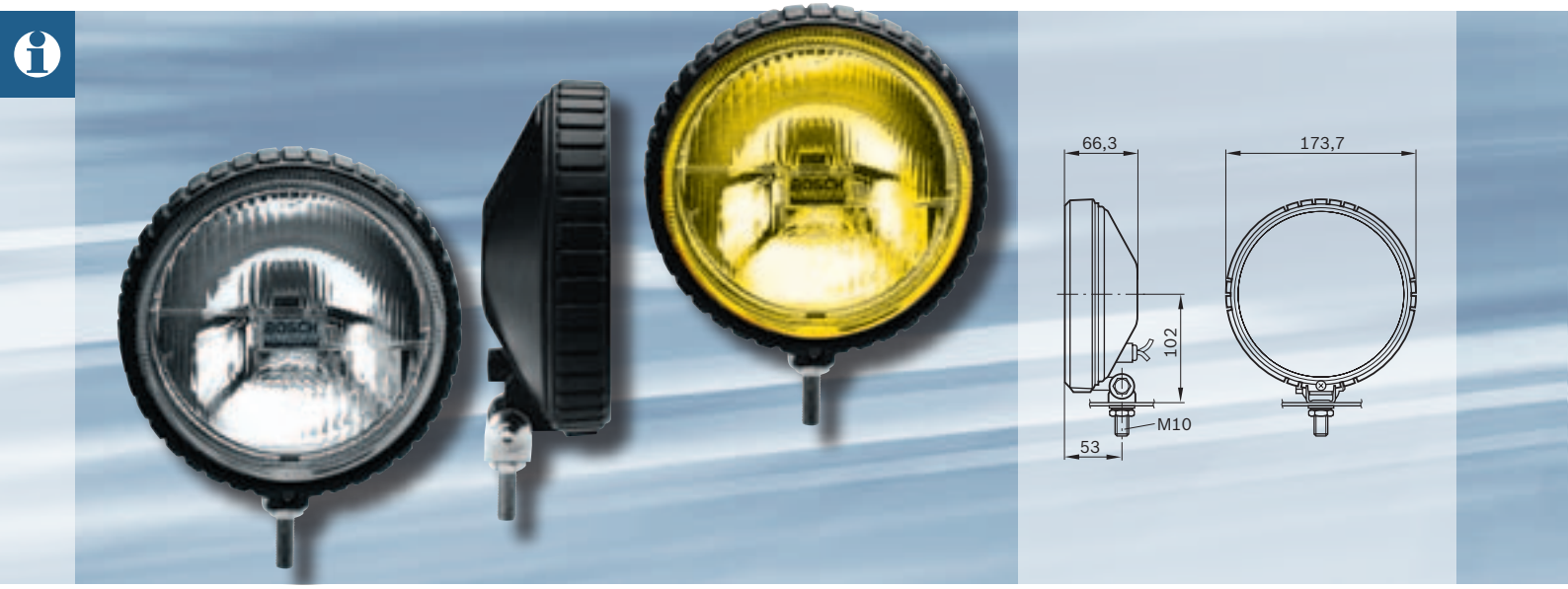

Flat auxiliary lamp for better visibility in fog, rain and snow. Impact-resistant, fracture-proof and non-corroding.

Headlamp housing
Fiberglass reinforced polyamide housing, matte black surface.

Lens
Colorless or yellow.

Attachment
With M10 threaded stud.

Mounting
Optionally upright or suspended.

Fog lamp 12 V/55 W

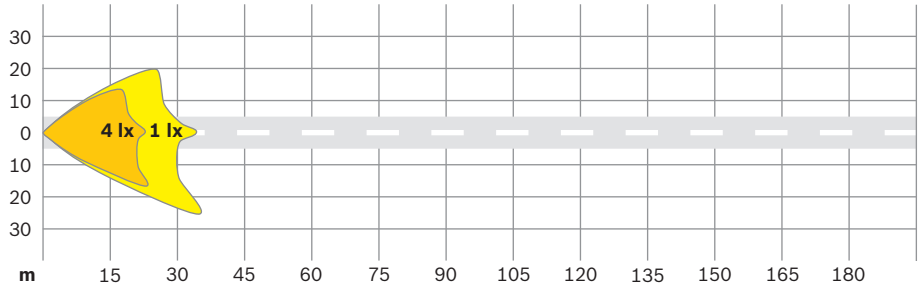

Touring 165	
Colorless	**0 305 602 001**
Yellow	**0 305 602 002**

Accessories and spare parts	
Protective cap	**1 300 516 017**[1)]
Fog-lamp unit, yellow	**1 305 334 904**

Type of bulb		
H3	12 V/55 W	**1 987 302 031**
H3	24 V/70 W	**1 987 302 431**

[1)] Observe legal regulations and safety instructions.

Pilot 160



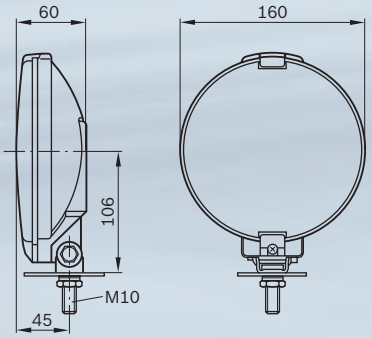

The all-rounder for additional mounting as a fog lamp.

Headlamp housing
Fiberglass reinforced polyamide housing, matte black surface.

Lens
Colorless or yellow.

Attachment
With M10 threaded stud.

Mounting
Optionally upright or suspended.

Scope of delivery
□ SB packaging: Complete installation kit, 2 headlamps with H3 bulbs, wiring harness, relay, fuse carrier, switch, assembly parts and installation instructions.

Fog lamp 12 V/55 W

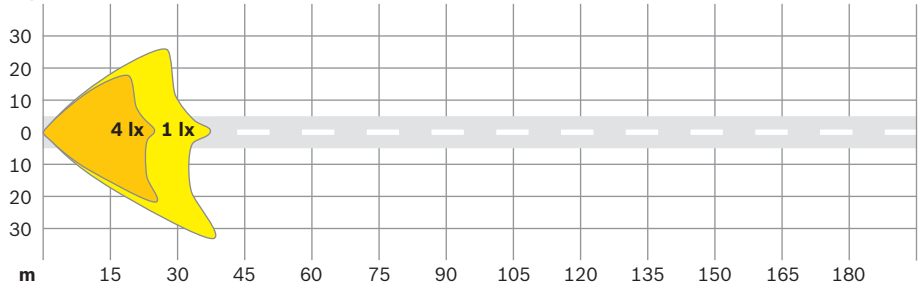

Pilot 160	
Colorless	**0 305 603 001**
SB packaging	**0 305 603 901** □
Yellow	**0 305 603 002**
SB packaging	**0 305 603 902** □

Accessories and spare parts	
Protective cap	**1 300 516 024**[1)]
Guard	**1 305 501 153**
Fog-lamp unit, colorless	**1 305 334 913**
Fog-lamp unit, yellow	**1 305 334 914**
Holder for unit, colorless	**1 301 091 004**

Type of bulb		
H3	12 V/55 W	**1 987 302 031**
H3	24 V/70 W	**1 987 302 431**

[1)] Observe legal regulations and safety instructions.

Compact 100

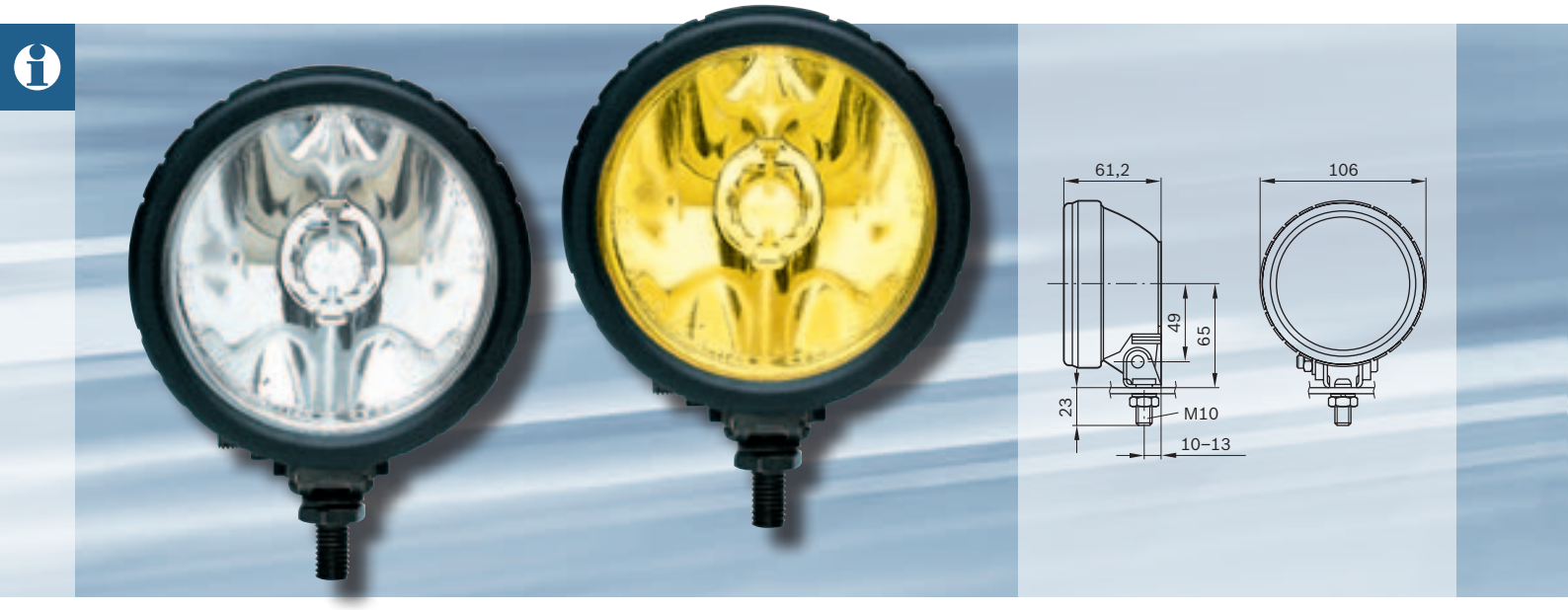

Optimum luminous efficiency thanks to computer-calculated HNS reflector geometry. Considerably more light than with conventional headlamps of identical size.

Headlamp housing
Fiberglass reinforced polyamide housing, matte black surface. Waterproof ventilation system with GORE-TEX® membrane.

Lens
Colorless or yellow.

Mounting
Optionally upright, suspended and side-mounted.

Scope of delivery
□ SB packaging: Complete installation kit, 2 headlamps with H3 bulbs 12 V/55 W, wiring harness, relay, fuse carrier, switch, assembly parts and installation instructions.

Fog lamp 12 V/55 W

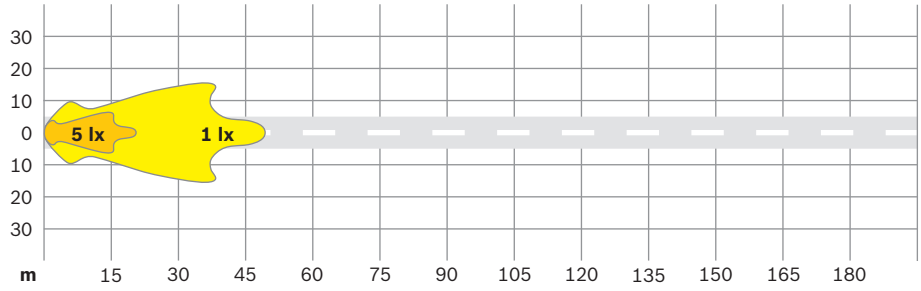

Compact 100	
Colorless	**0 305 055 001**
SB packaging	**0 305 055 901** □
Yellow	**0 305 055 002**
With additional attachment	**0 305 055 004**

Accessories and spare parts	
Fog-lamp unit, colorless	**1 305 300 921**
Holding ring	**1 305 520 010**

Type of bulb		
H3	12 V/55 W	**1 987 302 031**

Profi 210



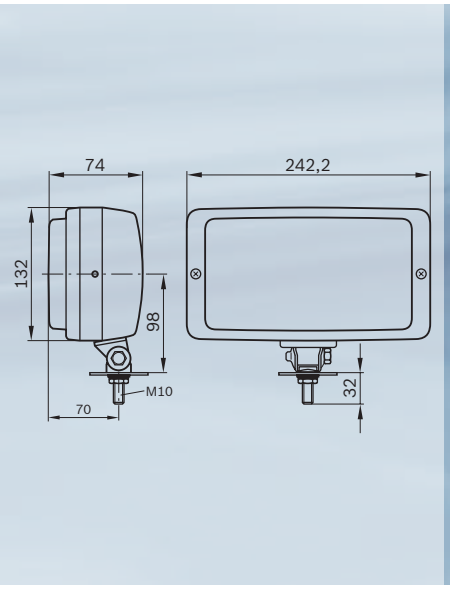

Fog lamp in steel housing. Robust and vibration-resistant. Scratch-resistant and non-corroding. Ideal for trucks and buses.

Headlamp housing
Waterproof steel housing.

Lens
Colorless or yellow.

Attachment
Pivoting fastening bracket with M10 threaded stud.

Mounting
Upright and suspended.

Profi 210	
Colorless	**0 986 310 539**

Accessories and spare parts	
Protective cap	**1 300 591 053**[1)]
Fog-lamp unit, colorless	**1 305 320 816**

Type of bulb		
H3	12 V/55 W	**1 987 302 031**
H3	24 V/70 W	**1 987 302 431**

[1)] Observe legal regulations and safety instructions.

Touring 170



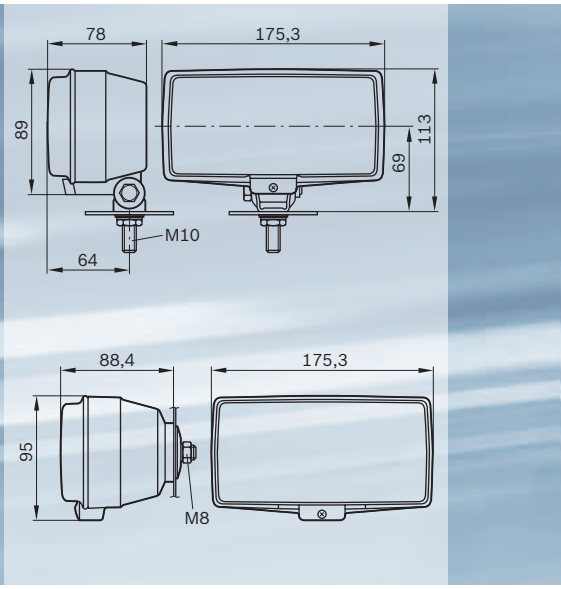

Medium-sized auxiliary lamp.
For mounting on roof and bumper. Impact-resistant, fracture-proof and non-corroding.

Headlamp housing
Fiberglass reinforced polyamide housing, matte black surface.

Lens
Colorless or yellow.

Attachment
With M10 threaded stud.

Mounting
Optionally upright, suspended and from rear with pivoting fastening bracket.

Fog lamp 12 V/55 W

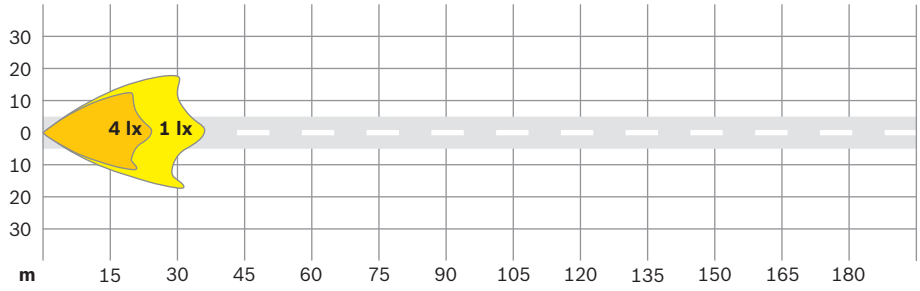

Touring 170	
Mounted using pivoting fastening bracket with threaded stud	
Colorless	**0 305 601 004**
Mounting from rear	
Colorless	**0 305 601 104**

Accessories and spare parts	
Protective cap	**1 300 591 049**[1)]
Fog-lamp unit, colorless	**1 305 354 924**
Hinged grommet	**1 300 312 010**

Type of bulb		
H3	12 V/55 W	**1 987 302 031**
H3	24 V/70 W	**1 987 302 431**

[1)] Observe legal regulations and safety instructions.

Pilot 150



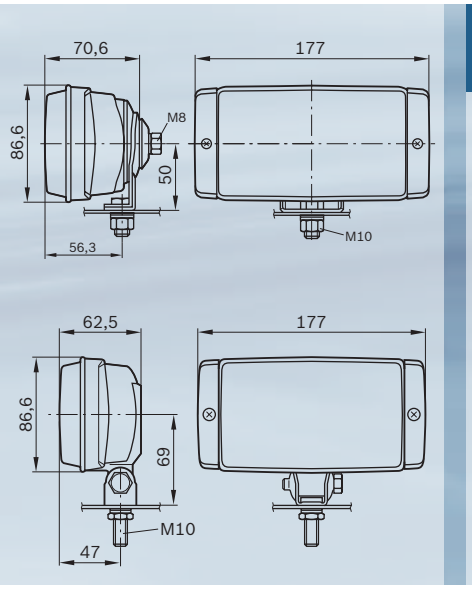

Extra-flat auxiliary lamp for vehicles with narrow bumper. Ideal for compact-class vehicles. Impact-resistant, fracture-proof and non-corroding.

Headlamp housing
Fiberglass reinforced polyamide housing, matte black surface.

Lens
Colorless or yellow.

Mounting
Optionally upright, suspended and from rear.

Scope of delivery
□ SB packaging: Complete installation kit, 2 headlamps with H3 bulbs, wiring harness, relay, fuse carrier, assembly parts and installation instructions.

Fog lamp 12 V/55 W

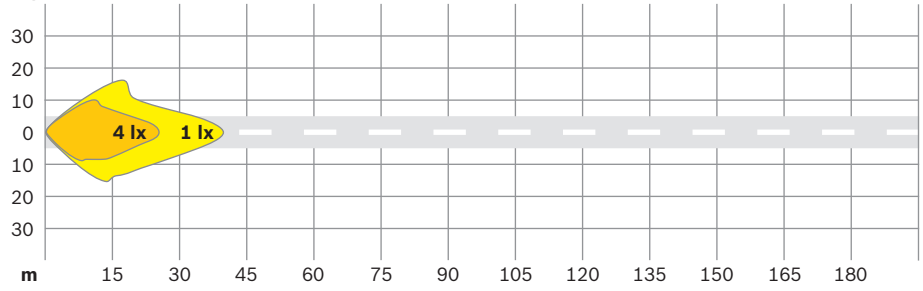

Pilot 150	
Mounting from rear or upright and suspended with fastening bracket	
Colorless	**0 305 406 101**
with hardened lens	**0 305 406 105**
Attachment with threaded stud	
Colorless	**0 305 406 001**
SB packaging	**0 305 406 901** □
Yellow	**0 305 406 002**
SB packaging	**0 305 406 902** □

Type of bulb		
H3	12 V/55 W	**1 987 302 031**
H3	24 V/70 W	**1 987 302 431**

Scout

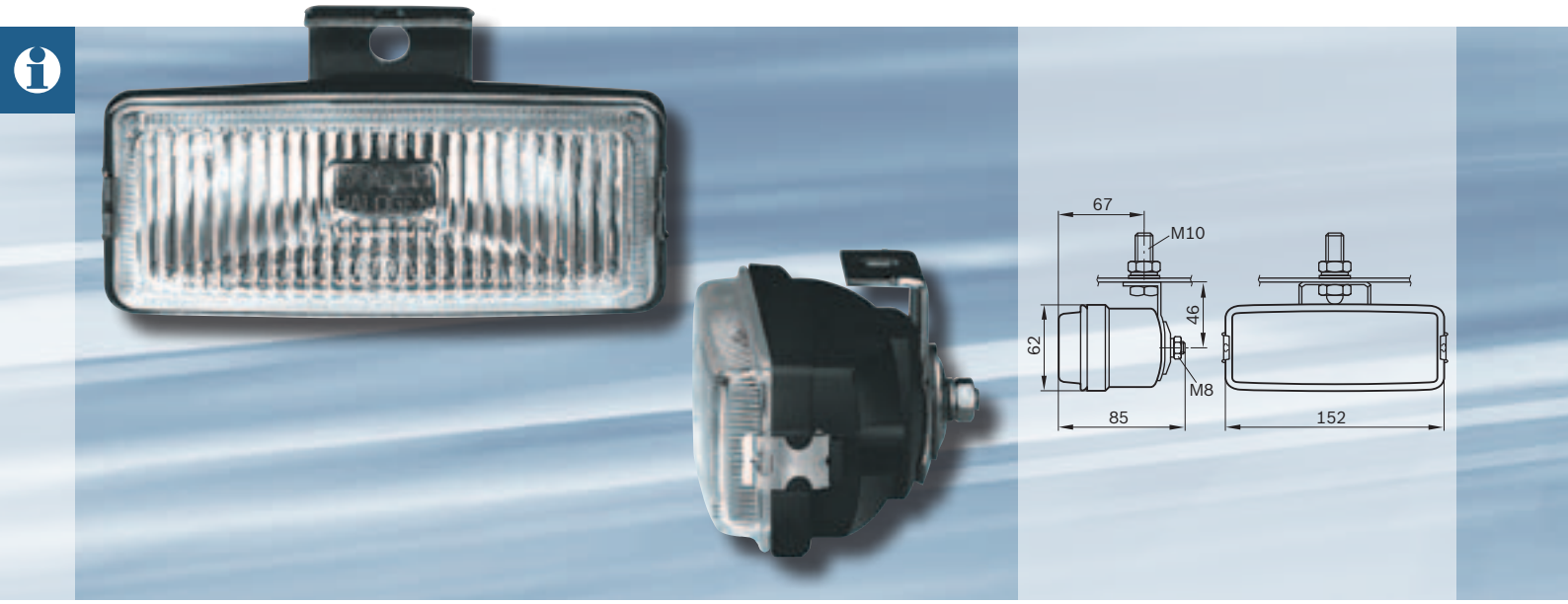

Small, high-performance fog lamp for mounting and installation in body opening. Better visibility in fog, rain and snow.

Headlamp housing
Fiberglass reinforced polyamide housing, matte black, impact-resistant, fracture-proof and non-corroding surface.

Lens
Colorless.

Attachment
Using central threaded stud.

Mounting
Optionally upright or suspended.

Scope of delivery
□ SB packaging: Complete installation kit, 2 headlamps with H3 bulbs, wiring harness, relay, fuse carrier, switch, assembly parts and installation instructions.

Fog lamp 12 V/55 W

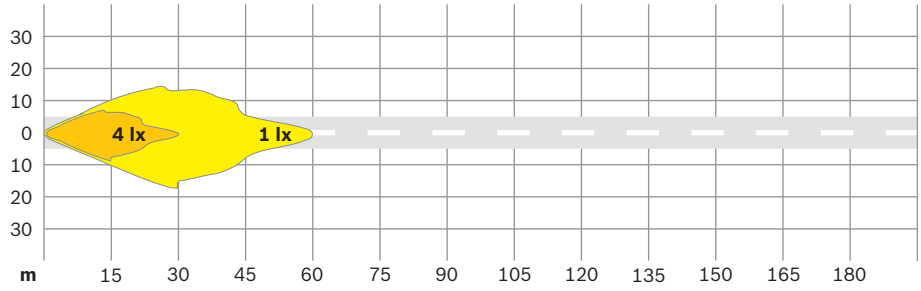

Scout	
Colorless	**0 305 555 001**
SB packaging	**0 305 555 901** □

Accessories and spare parts	
Fog-lamp unit, colorless	**1 305 354 945**

Type of bulb		
H3	12 V/55 W	**1 987 302 031**

Flood lamps

Range overview

A 40/41	**Compact 100** – Flood lamp. **Compact 100 Leisure** – Flood lamp with magnetic attachment.	
A 42	**ASW 105** – Flood lamp, with option of handle and switch.	
A 43	**Kiruna 140** – Flood lamp, with option of handle and switch.	
A 44/46/49 **A 50/52**	**Pilot** – Flood lamp.	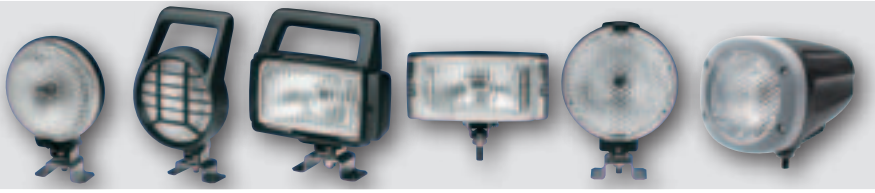
A 48	**ASW 140 x 65** – Flood lamp for extremely confined installation locations.	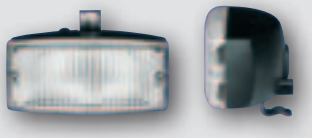
A 45/47	**Touring** – Flood lamp, with option of handle and switch.	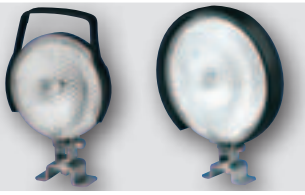
A 51	**Profi** – Exceptionally robust flood lamp, complete with guard.	

Information



Flood lamps
Flood lamps are used for illuminating stationary or mobile workplaces. Their robust design makes flood lamps particularly well suited for mounting on commercial vehicles and opens up a wide variety of applications. Flood lamps are widely used in construction, agriculture and forestry, transport, municipal services, by the emergency services and in shipping.

Flood lamps feature large, uniform light distribution. This allows a large working area to be illuminated at close range.

Flood lamps

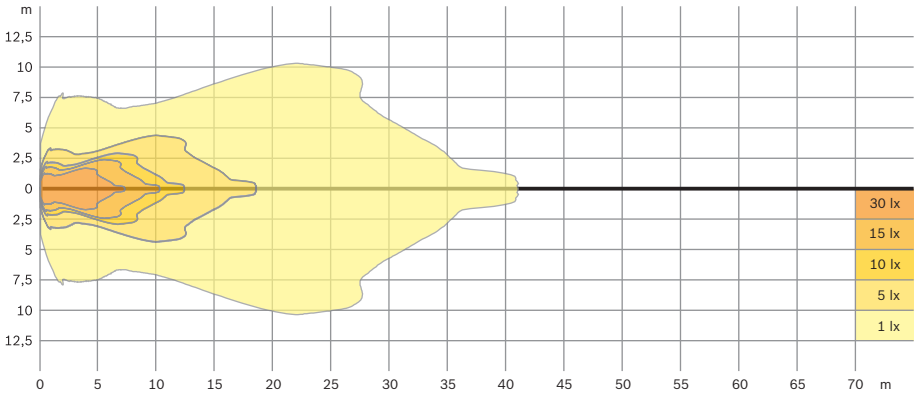

Compact 100

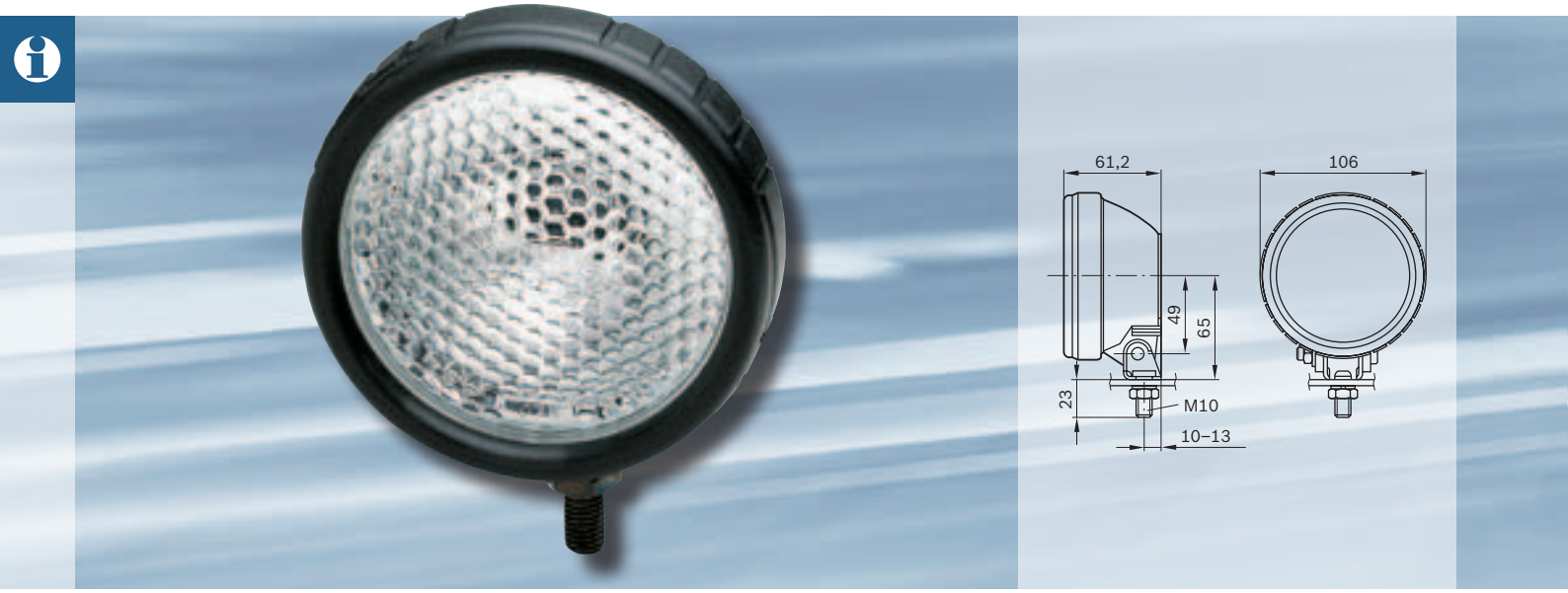

Compact flood lamp for fitting in confined spaces.

Technical features
Computer-generated reflector for increased luminous efficiency compared to conventional headlamps of the same size. Bulbs can be changed from the front using a bayonet-lock ring, making service easy as no tools are required.

Headlamp housing
Fiberglass reinforced plastic, matte black, impact-resistant, fracture-proof and non-corroding surface.

Lens
Colorless lens with optical fluting, reflector in waterproof seal.

Mounting
Optionally upright, suspended or side-mounted (90° offset).

Attachment
Pivoting, black-chromated, corrosion-resistant M10 threaded stud.

Electrical connection
Two-pole, blade-terminal connections, cable entry through integrated rubber grommet.

Scope of delivery
In single pack: 1 lamp with assembly parts. Halogen H3 bulb to be ordered separately.

Flood lamp 12 V/55 W

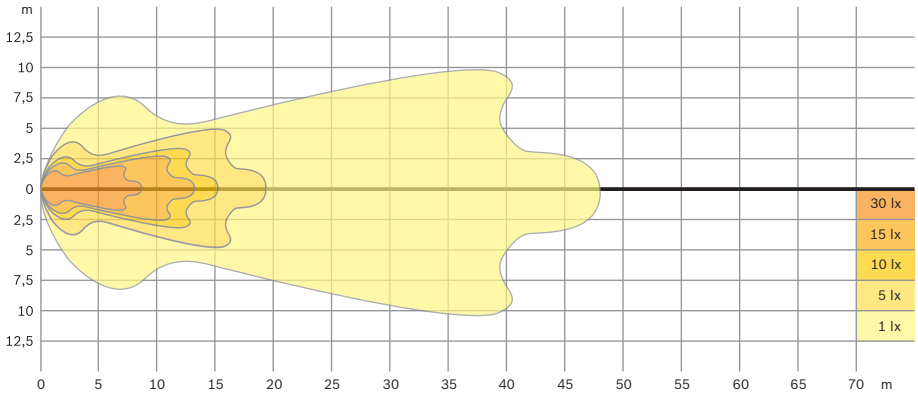

Compact 100	
	0 306 055 101

Accessories and spare parts	
Headlight unit	**1 305 300 928**

Type of bulb		
H3	12 V/55 W	**1 987 302 031**

Compact 100 Leisure



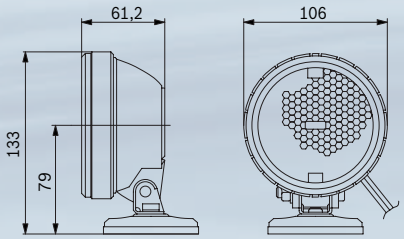

Flood lamp with magnetic attachment, spiral-type 3.5 m cable and multi-purpose automotive connector. Ideal for hobbies, leisure, in case of breakdowns, and for working.

Technical features
Computer-generated reflector for increased luminous efficiency compared to conventional headlamps of the same size. Bulbs can be changed from the front using a bayonet-lock ring, making service easy as no tools are required.

Headlamp housing
Fiberglass reinforced plastic, matte black, impact-resistant, fracture-proof and non-corroding surface.

Lens
Colorless lens with optical fluting, reflector in waterproof seal.

Attachment
Magnetic Ø 71 mm.

Pivoting range
Pivots through 90°.

Electrical connection
2 x 0.75 m cable, stretched length 3.50 m, 2-pin plug for DIN ISO 4165 socket and car cigarette lighter.

Flood lamp 12 V/35 W

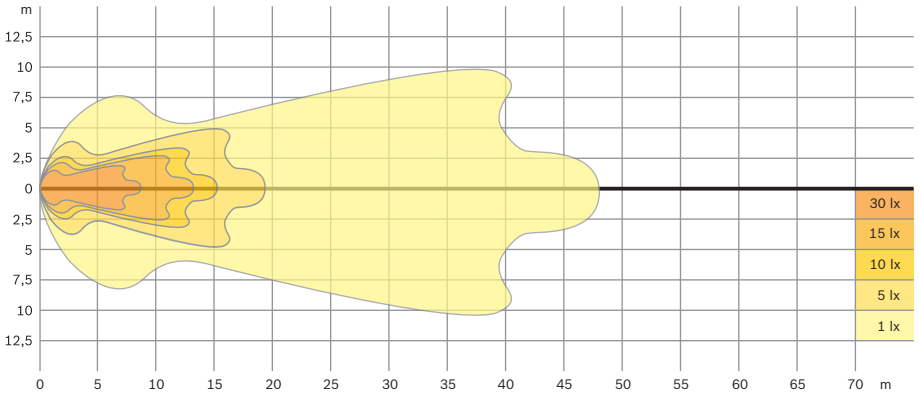

Scope of delivery
In single SB pack: 1 lamp including H3 halogen bulb 12V/35 W, magnet, 3.5 m spiral cable with multi-purpose automotive connector, assembled, ready to use.

Compact 100 Leisure	
	0 306 055 102

Accessories and spare parts	
Headlight unit	**1 305 300 928**

Type of bulb		
H3	12 V/35 W	Order externally

105



Flood lamp for F2 bulb, steel model with handle and switch.

Headlamp housing
Steel, black resicoated, scratch-resistant and non-corroding.

Lens
Colorless lens with rectangular fluting.

Mounting
Upright.

Attachment
Pivoting, non-corroding fastening bracket with 4 holes for M 6 bolts

Pivoting range
29° forwards, 29° to rear, 315° lateral.

Electrical connection
Single-pole (separate ground connection provided). Screw connection, cable entry through rubber grommet

Flood lamp 12 V/35 W

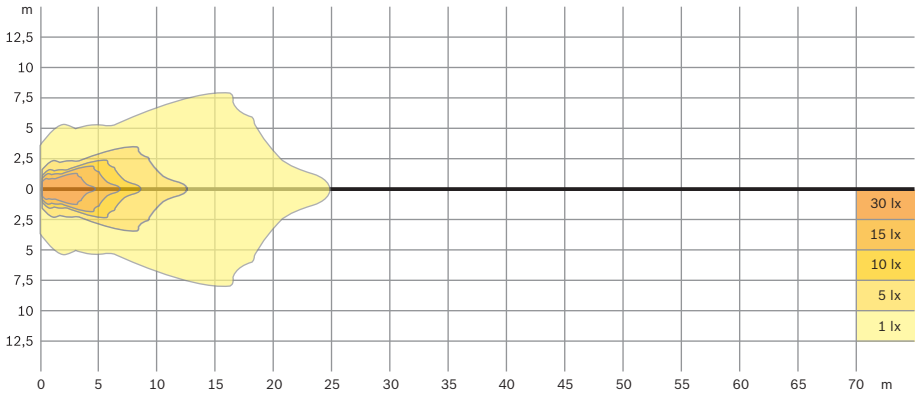

105	
With handle and switch	**0 306 181 009**

Accessories and spare parts	
Lens	**1 305 600 030**
Sealing frame	**1 300 212 010**

Type of bulb		
F2 BA20s	12 V/35 W	Osram 7309
F2 BA20s	24 V/35 W	Osram 7409

Kiruna 140



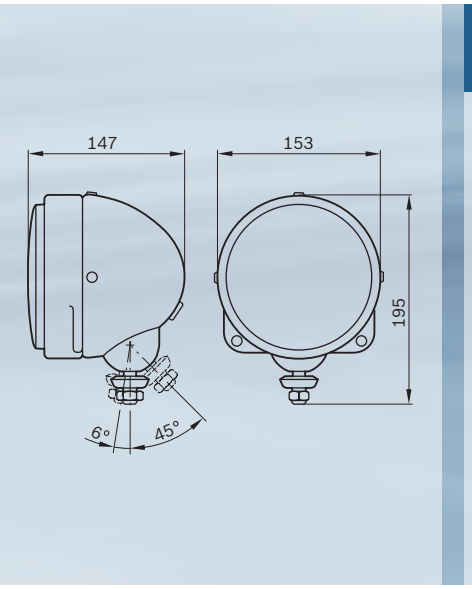

Vibration-resistant flood lamp for heavy-duty applications.

Headlamp housing
Steel, black-resicoated, scratch-resistant and non-corroding.

Headlight unit
Reflector has watertight bond to lens and is mounted in housing with vibration absorbing rubber ring. This results in low transmission of vibration.

Lens
Colorless lens with rectangular fluting.

Mounting
Optionally upright or suspended on horizontal, vertical or angled surfaces.

Attachment
Pivoting, non-corroding M12 threaded stud.

Pivoting range
6° forwards, 45° to rear, 360° lateral.

Electrical connection
Single-pole, blade-terminal connection, cable entry through rubber grommet.

Scope of delivery
In single pack: 1 lamp with assembly parts. Halogen H1 bulb to be ordered separately.

Flood lamp 12 V/55 W

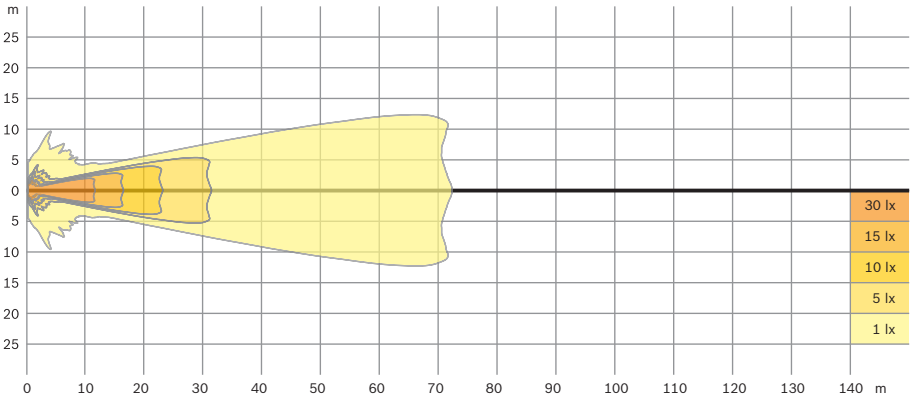

Kiruna 140	
	0 306 382 001

Accessories and spare parts	
Headlight unit	**1 305 302 021**
Sealing frame	**1 301 015 115**
Housing with sealing frame	**1 305 122 901**

Type of bulb		
H1	12 V/55 W	**1 987 302 011**
H1	12 V/100 W	**1 987 302 016**
H1	24 V/70 W	**1 987 302 411**

Pilot 140



Waterproof flood lamp, available with or without practical handle and guard. For heavy-duty applications.

Headlamp housing
Fiberglass reinforced plastic, matte black surface. Impact-resistant, non-corroding and fracture-proof.

Lens
Colorless lens, with waterproof bonding to reflector.

Mounting
Optionally upright or suspended.

Attachment
Pivoting, corrosion-resistant fastening bracket with 4 holes for M 6 bolts

Pivoting range
30° forwards, 110° to rear, 360° lateral.

Electrical connection
Two-pole, blade-terminal connections, cable entry through splash-proof rubber grommet.

Scope of delivery
In single pack: 1 lamp with assembly parts. Halogen H3 bulb to be ordered separately.

Flood lamp 12 V/55 W

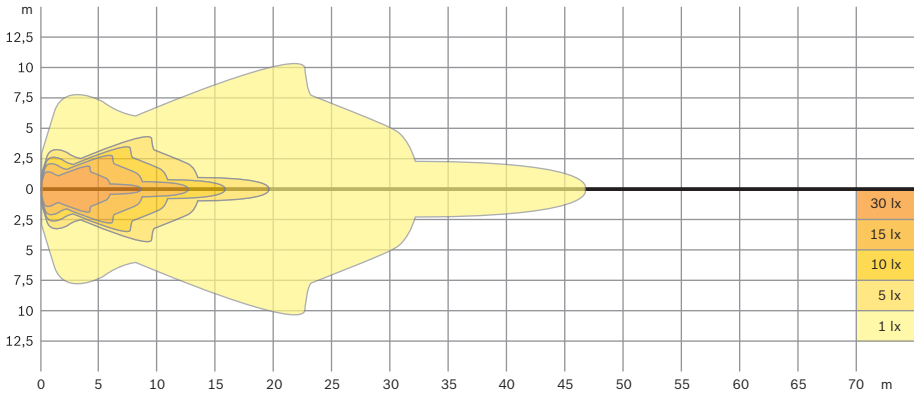

Pilot 140	
Without handle, without guard	**0 306 481 001**
Without handle, without guard, ring-shaped bulb cover	**0 306 481 002**
With handle and guard	**0 306 481 004**

Accessories and spare parts	
Guard without handle (for ...001)	**1 305 501 121**
Headlight unit	**1 305 301 918**
Hinged grommet	**1 300 312 010**
Fastening bracket	**1 307 022 236**

Type of bulb		
H3	12 V/55 W	**1 987 302 031**
H3	24 V/70 W	**1 987 302 431**

Touring 140



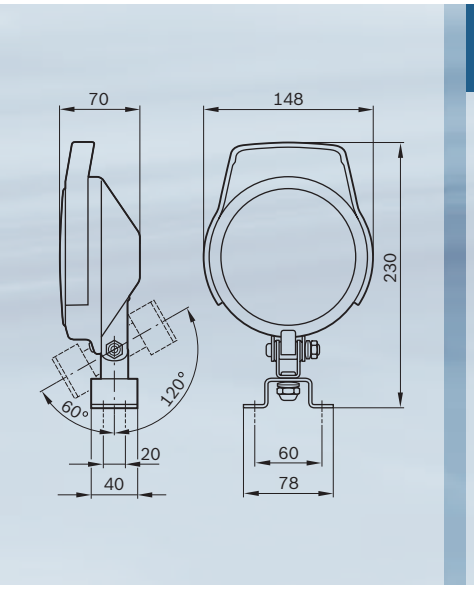

With switch and handle for convenient regulation of pivoting range.

Headlamp housing
Steel, black-resicoated, scratch-resistant and non-corroding.

Lens
Colorless lens, with waterproof bonding to reflector.

Mounting
Optionally upright or suspended.

Attachment
Pivoting, corrosion-resistant fastening bracket with 4 holes for M6 bolts

Pivoting range
60° forwards, 120° to rear, 360° lateral.

Electrical connection
Single-pole (separate ground connection provided), blade-terminal connections, cable entry through rubber grommet.

Scope of delivery
In single pack: 1 lamp with assembly parts. Halogen H3 bulb to be ordered separately.

Flood lamp 12 V/55 W

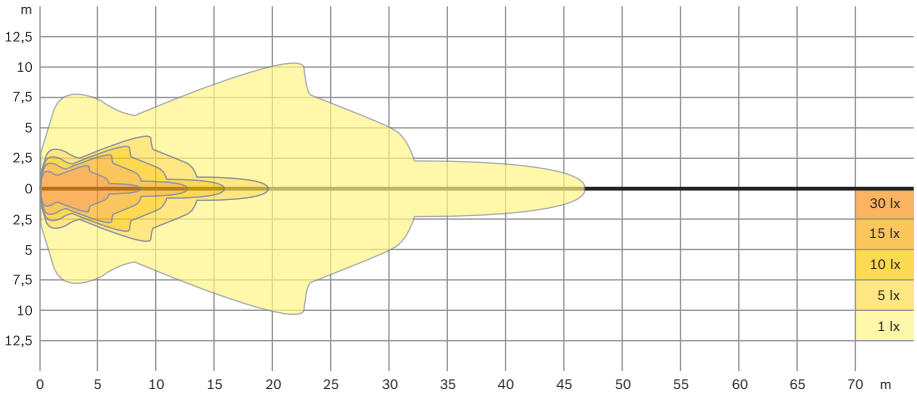

Touring 140	
With handle and switch	**0 306 480 002**

Accessories and spare parts	
Headlight unit	**1 305 301 918**
Fastening bracket	**1 307 022 236**

Type of bulb		
H3	12 V/55 W	**1 987 302 031**
H3	24 V/70 W	**1 987 302 431**

Pilot 160

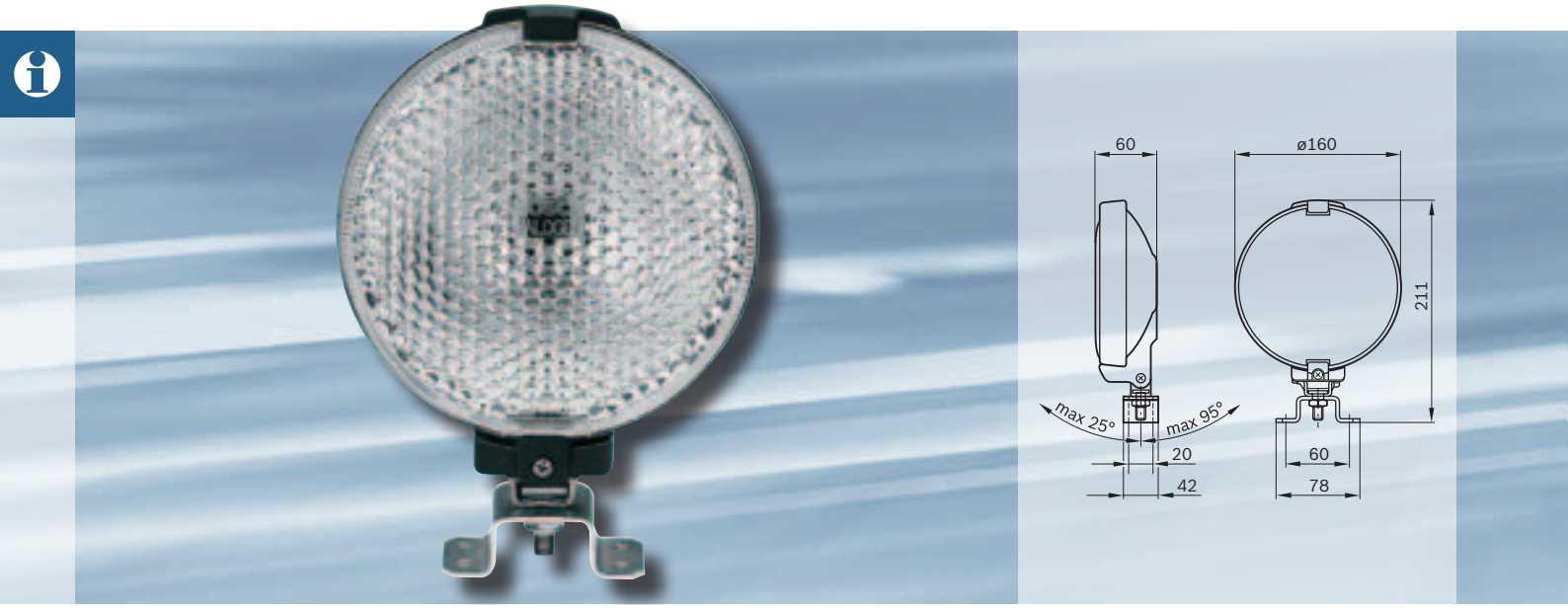

Flood lamp with fastening bracket for flexible installation. Universal application range. Optimum homogeneous light distribution.

Headlamp housing
Fiberglass reinforced plastic, matte black surface.

Headlight unit
Interchangeable.

Mounting
Upright and suspended.

Attachment
With pivoting forked holder for mounting on body or bumper

Pivoting range
25° forwards, 95° to rear, 360° lateral.

Electrical connection
Cable entry through grommet for single cores.

Scope of delivery
Individual packaging: 1 lamp with assembly parts. Halogen H3 bulb to be ordered separately.

Flood lamp 12 V/55 W

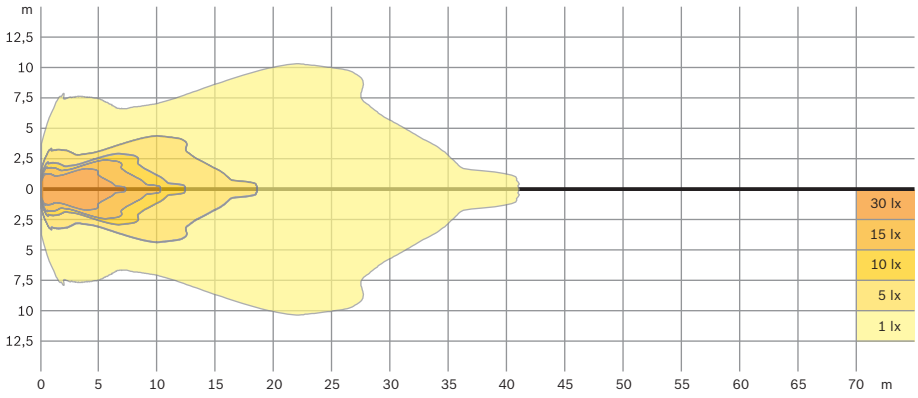

Pilot 160	
	0 306 680 001

Accessories and spare parts	
Holder for unit	**1 301 091 004**
Fastening bracket	**1 307 022 236**

Type of bulb		
H3	12 V/55 W	**1 987 302 031**
H3	24 V/70 W	**1 987 302 431**

Touring 190



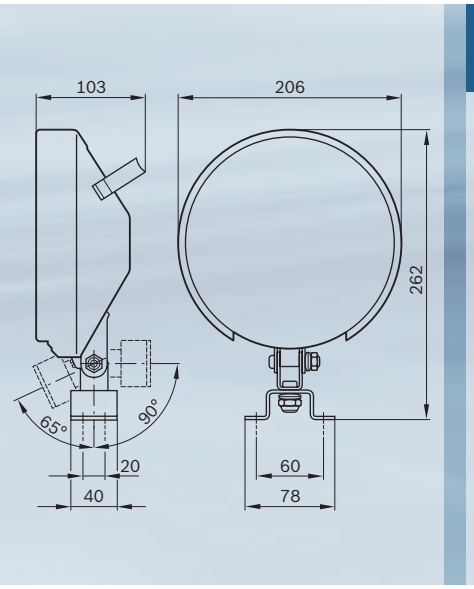

With and without handle and switch.

Headlamp housing
Steel, black resicoated, scratch-resistant and non-corroding.

Lens
Colorless lens, with waterproof bonding to reflector.

Mounting
Upright and suspended.

Attachment
Pivoting, corrosion-resistant fastening bracket with 4 holes for M6 bolts

Pivoting range
65° forwards, 90° to rear, 360° lateral.

Electrical connection
Single pole (separate ground connection provided), blade-terminal connections, cable entry through rubber grommet.

Scope of delivery
In single pack: 1 lamp with assembly parts. Halogen H3 bulb to be ordered separately.

Flood lamp 12 V/55 W

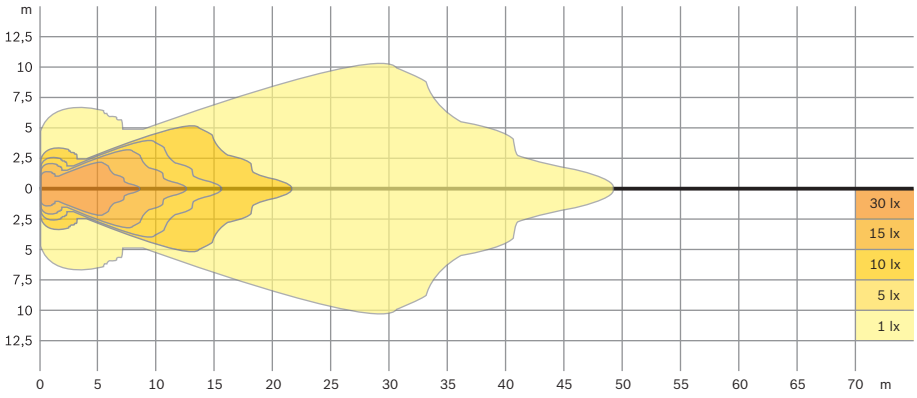

Touring 190	
With handle and switch	**0 306 980 002**
Without handle, without switch	**0 306 980 003**

Accessories and spare parts	
Headlight unit	**1 305 313 935**
Fastening bracket	**1 307 022 236**

Type of bulb		
H3	12 V/55 W	**1 987 302 031**
H3	12 V/100 W	**1 987 302 036**
H3	24 V/70 W	**1 987 302 431**

140 x 65



Particularly suitable for mounting in confined spaces and for all purposes.

Headlamp housing
Plastic, matte black embossed.
Plastic reflector.

Lens
Colorless lens, plastic.

Mounting
Optionally upright or suspended on horizontal, vertical or angled surfaces.
Mounting examples: See illustration.

Attachment
With adjustable, corrosion-resistant fastening bracket (2 brackets supplied).

Electrical connection
Single pole, blade-terminal connection, cable entry through rubber grommet.

Flood lamp 12 V/21 W

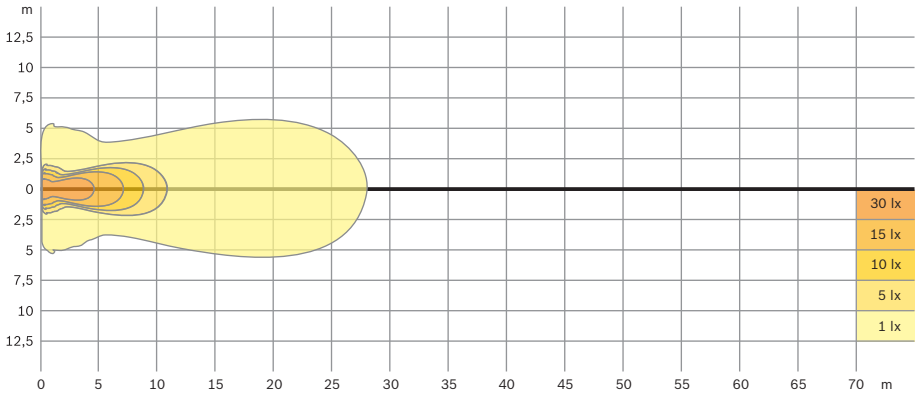

140 x 65	
	0 306 483 001

Accessories and spare parts	
Lens	**1 305 620 054**

Type of bulb		
P21W	12 V/21 W	**1 987 302 201**
P21W	24 V/21 W	**1 987 302 501**

Pilot 145



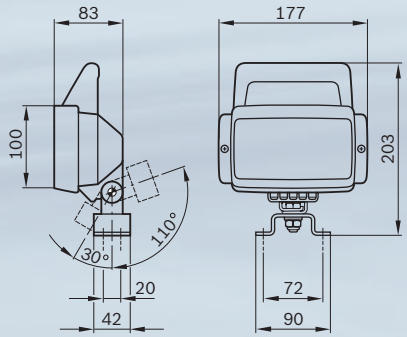

Versatile flood lamp for a wide range of applications. Available with or without handle and with or without fastening bracket.

Headlamp housing
Fiberglass reinforced plastic, matte black surface. Impact-resistant, non-corroding and fracture-proof.

Lens
Colorless lens, with waterproof bonding to reflector.

Mounting
Optionally upright or suspended.

Attachment
Pivoting, corrosion-resistant fastening bracket with 4 holes for M6 bolts or pivoting, corrosion- resistant M10 threaded studs.

Pivoting range
30° forwards, 110° to rear, 360° lateral.

Electrical connection
Two-pole, blade-terminal connections, cable entry through splash-proof rubber grommet.

Scope of delivery
In single pack: 1 lamp with assembly parts. Halogen H3 bulb to be ordered separately.

Flood lamp 12 V/55 W

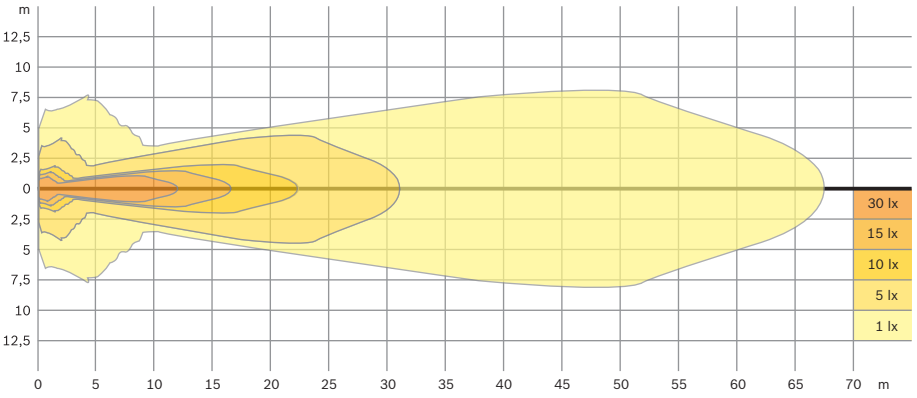

Pilot 145	
With fastening bracket	**0 306 482 001**
Without fastening bracket	**0 306 482 010**
With handle, frame and fastening bracket	**0 306 482 003**

Accessories and spare parts	
Headlight unit	**1 305 354 911**
Hinged grommet	**1 300 312 010**
Guard	**1 305 540 011**

Type of bulb		
H3	12 V/55 W	**1 987 302 031**
H3	24 V/70 W	**1 987 302 431**

Pilot 150



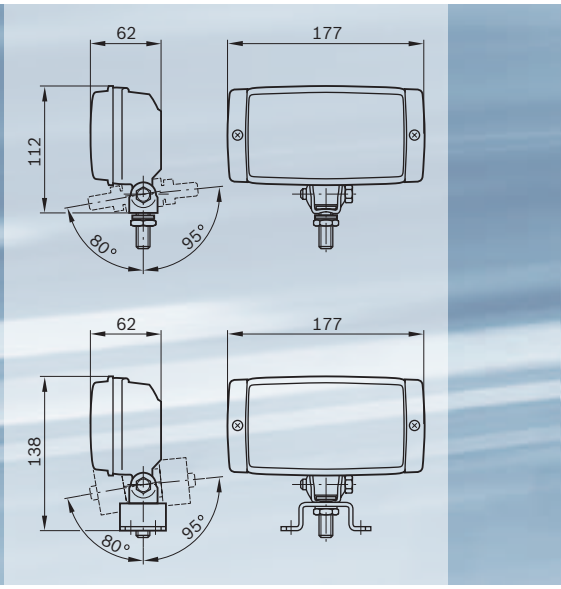

Flood lamp with and without pivoting fastening bracket for flexible mounting Universal application range. Optimum homogeneous light distribution.

Headlamp housing
Fiberglass reinforced plastic, matte black surface.

Headlight unit
Interchangeable.

Mounting
Upright and suspended.

Attachment
With pivoting forked holder for mounting on body or bumper

Pivoting range
80° forwards, 95° to rear, 360° lateral.

Electrical connection
Blade terminal and grommet.

Scope of delivery
In single pack: 1 lamp with assembly parts. Halogen H3 bulb to be ordered separately.

Flood lamp 12 V/55 W

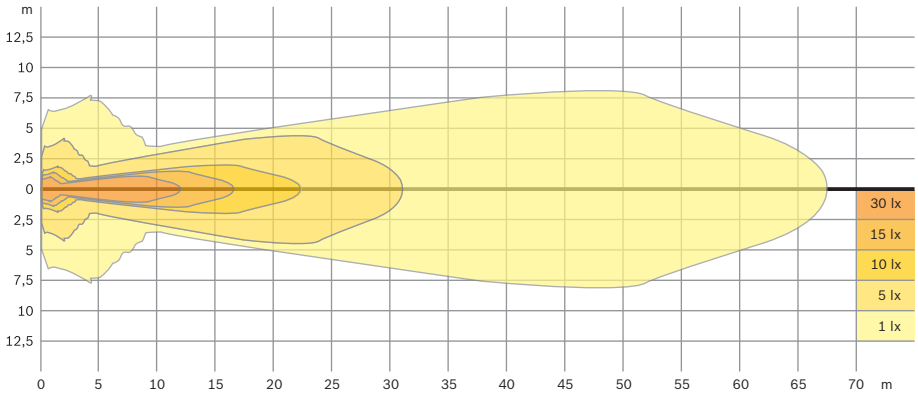

Pilot 150	
With forked holder	**0 306 484 001**
With fastening bracket	**0 306 484 002**

Accessories and spare parts	
Headlight unit	**1 305 354 911**
Holder for unit	**1 301 091 002**
Fastening bracket	**1 307 022 236**
Guard	**1 305 540 165**

Type of bulb		
H3	12 V/55 W	**1 987 302 031**
H3	24 V/70 W	**1 987 302 431**

Profi 210



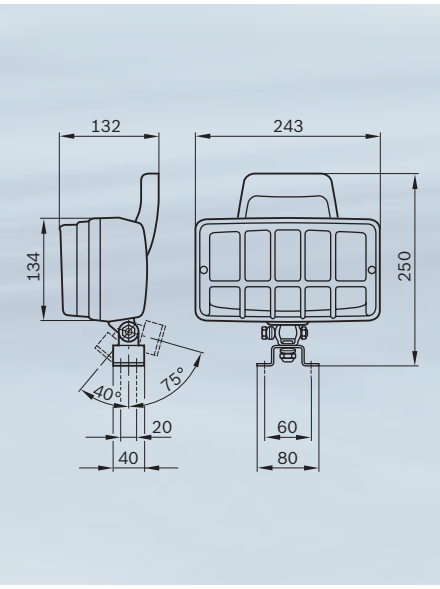

Extremely robust with impact-resistant plastic guard. Optionally with handle and switch.

Headlamp housing
Steel, black-resicoated, scratch-resistant and non-corroding. Outer rim and guard made of Fiberglass reinforced polyamide, matte black, impact-resistant and fracture-proof.

Lens
Colorless lens, with waterproof bonding to reflector.

Mounting
Upright and suspended.

Attachment
Pivoting, corrosion-resistant fastening bracket with 4 holes for M 6 bolts

Pivoting range
40° forwards, 75° to rear, 360° lateral.

Electrical connection
Single pole (separate ground connection provided), blade-terminal connections, cable entry through rubber grommet.

Scope of delivery
In single pack: 1 lamp with assembly parts. Halogen H3 bulb to be ordered separately. With guard.

Flood lamp 12 V/55 W

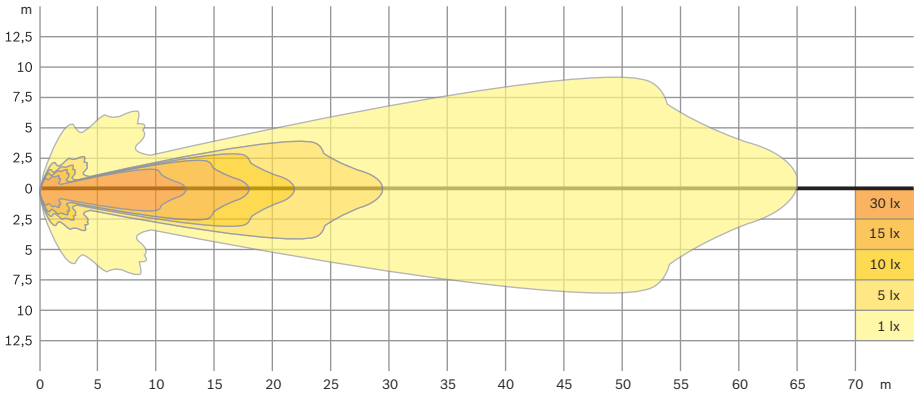

Profi 210	
With handle and switch	**0 306 080 002**
Without handle, without switch	**0 306 080 003**

Accessories and spare parts	
Guard	**1 305 540 933**
Fastening bracket	**1 307 022 236**

Type of bulb		
H3	12 V/55 W	**1 987 302 031**
H3	12 V/100 W	**1 987 302 036**
H3	24 V/70 W	**1 987 302 431**

Pilot X



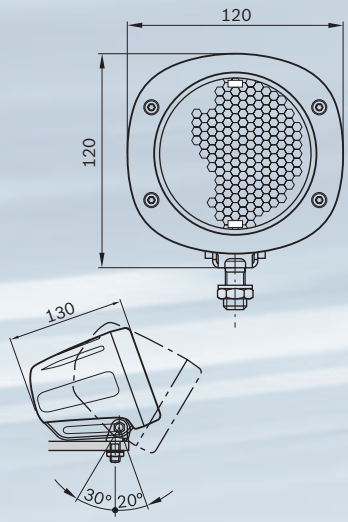

The most compact flood lamp of its type. Broad range of applications – from forestry machinery to construction vehicles, and from agricultural vehicles to emergency vehicles. Xenon light similar to daylight provides broad and uniform light distribution. Around 2.5x higher luminous efficiency than halogen bulbs, around ⅓ less energy consumption and longer service life. Integrated control unit with D1 technology. EMC tested.

Headlamp housing
Fiberglass reinforced plastic.
Corrosion-resistant.
Dimensions: 130 x 120 x 120 mm.

Mounting
Optionally upright or suspended.

Attachment
Pivoting, corrosion-resistant M10 threaded stud.
Pivoting range 20° forwards, 30° to rear, 360° lateral.
Adjustable by 6 cm in longitudinal axis.

Electrical connection
Connector: 15 cm (mobile).

Scope of delivery
Xenon gaseous-discharge lamp, igniter, Xenon control unit. Completely pre-assembled, ready to connect.

Flood lamp 24 V/35 W

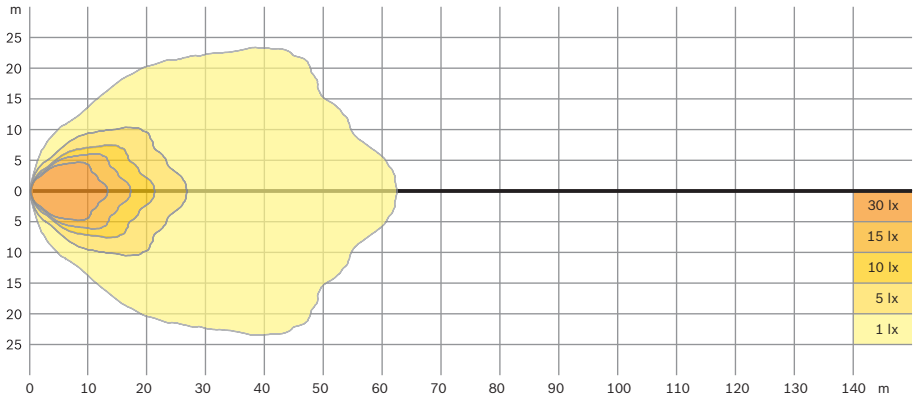

Pilot X	
24 V	**0 986 310 675**
12 V	**0 986 310 676**

Accessories and spare parts	
Reflector	**1 987 305 079**
Lens including O-ring	**1 987 305 108**
Cable 1.000 mm, blue	**1 987 305 109**
Control unit 24 V	**0 986 310 209**
Control unit 12 V	**0 986 310 211**

Type of bulb		
D1S	35 W	**1 987 302 905**

Spot lamps

Range overview

A 56	**Pilot** – Spot lamp. Also available as a floodlamp.	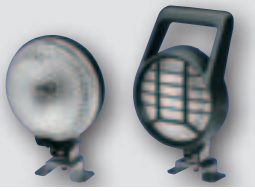
A 57/58	**Touring** – Spot lamp, with option of handle and switch. Also available as a floodlamp.	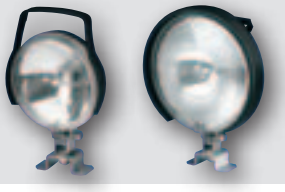

Information

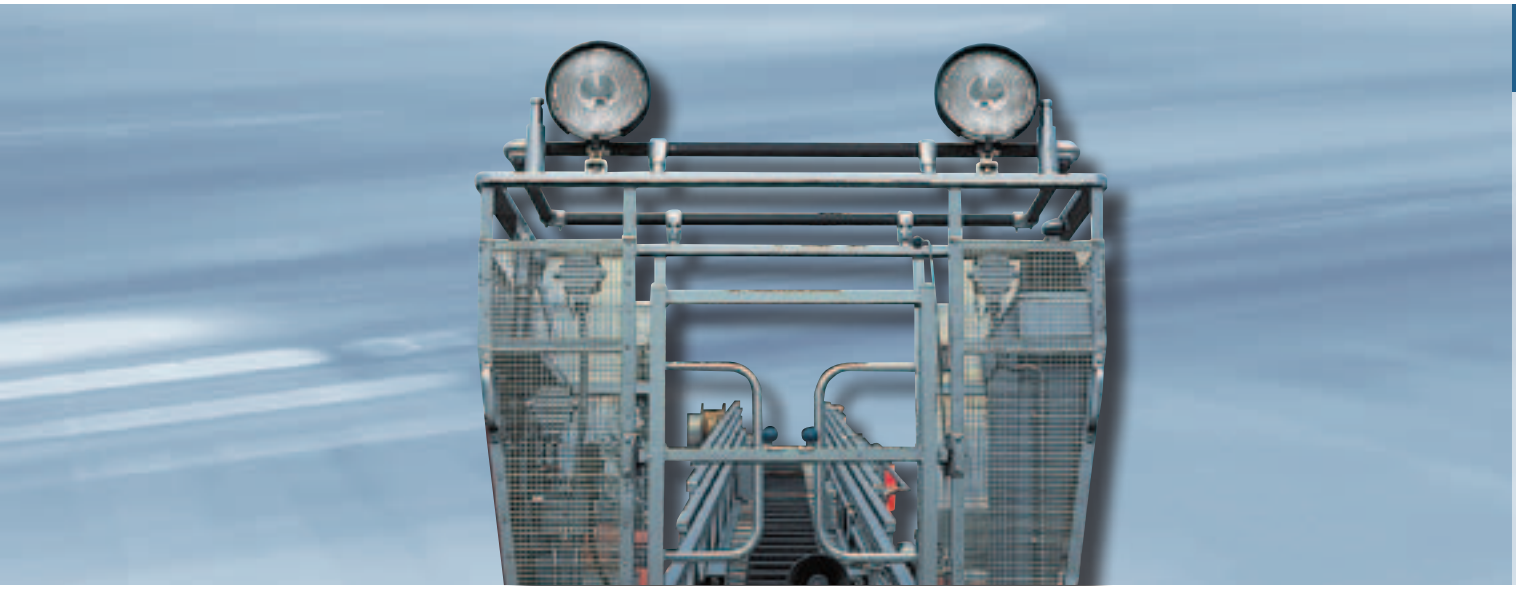

Spot lamps
The densely concentrated light from a spot lamp is ideal when there is a need for targeted illumination of an object from a long distance. For example, spot lamps are used by the police, by fire brigades, and for technical assistance and emergency services. However, a spot lamp can also be useful in other specialist areas where there is a need for a strong searchlight, for example inland waterways for illuminating canals, locks or landing stages.

A spot lamp produces a narrow beam of concentrated high-intensity light, effectively illuminating a specific area at long range.

Spot lamps

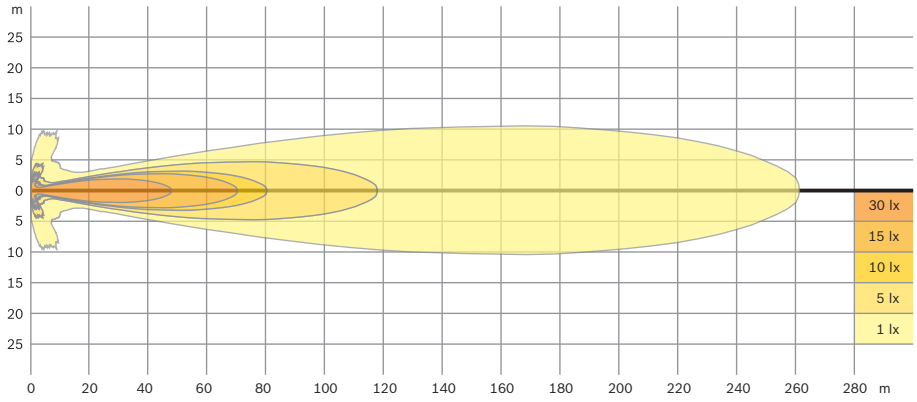

Pilot 140



Spot lamp version with handle and guard. For heavy-duty applications.

Headlamp housing
Fiberglass reinforced plastic, matte black surface. Impact-resistant, non-corroding and fracture-proof.

Lens
Colorless lens, with waterproof bonding to reflector.

Mounting
Optionally upright or suspended.

Attachment
Pivoting, corrosion-resistant fastening bracket with 4 holes for M 6 bolts

Pivoting range
30° forwards, 110° to rear, 360° lateral.

Electrical connection
Two-pole, blade-terminal connections, cable entry through splash-proof rubber grommet.

Scope of delivery
In single pack: 1 lamp with assembly parts. Halogen H3 bulb to be ordered separately.

Spot lamp 12 V/55 W

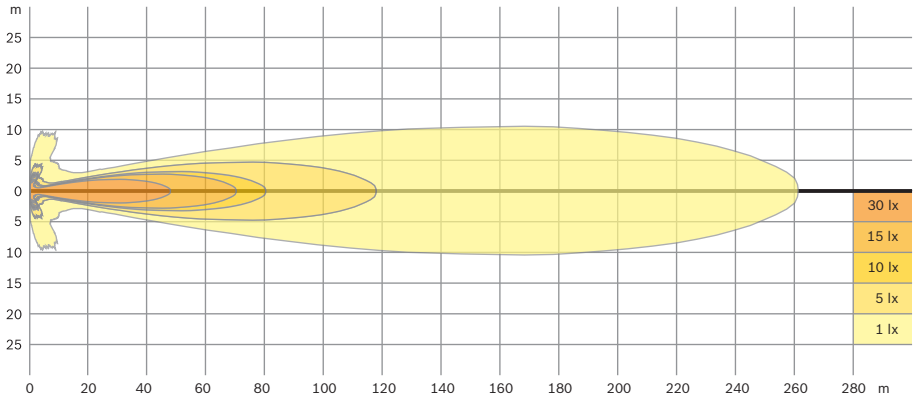

Pilot 140	
With handle and guard	**0 306 481 003**

Accessories and spare parts	
Headlight unit	**1 305 301 917**
Hinged grommet	**1 300 312 010**
Fastening bracket	**1 307 022 236**

Type of bulb		
H3	12 V/55 W	**1 987 302 031**
H3	24 V/70 W	**1 987 302 431**

Touring 140



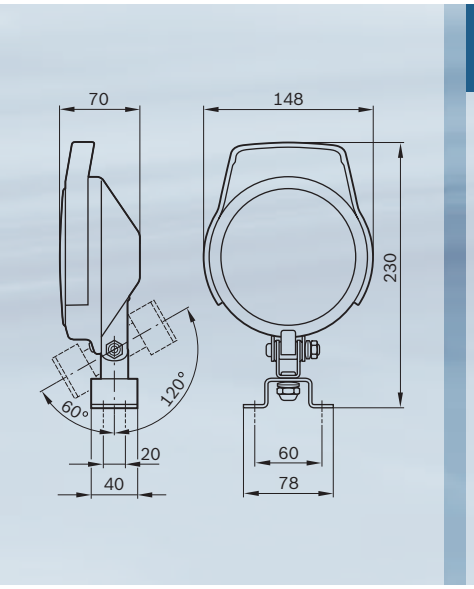

With switch and handle for convenient regulation of pivoting range.

Headlamp housing
Steel, black-resicoated, scratch-proof and non-corroding.

Lens
Lens with waterproof bonding to reflector.

Mounting
Optionally upright or suspended.

Attachment
Pivoting, corrosion-resistant fastening bracket with 4 holes for M 6 bolts

Pivoting range
60° forwards, 120° to rear, 360° lateral.

Electrical connection
Single-pole (separate ground connection provided), blade-terminal connections, cable entry through rubber grommet.

Spot lamp 12 V/55 W

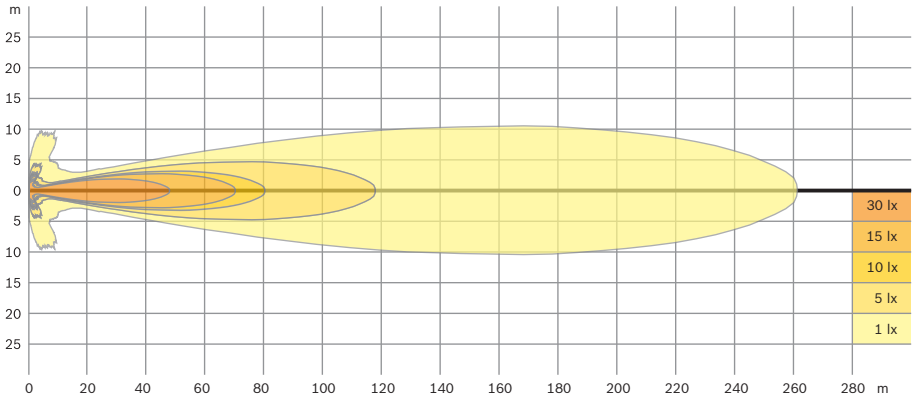

Touring 140	
With handle and switch	**0 306 480 001**

Accessories and spare parts	
Headlight unit	**1 305 301 917**
Fastening bracket	**1 307 022 236**

Type of bulb		
H3	12 V/55 W	**1 987 302 031**
H3	24 V/70 W	**1 987 302 431**

Touring 190



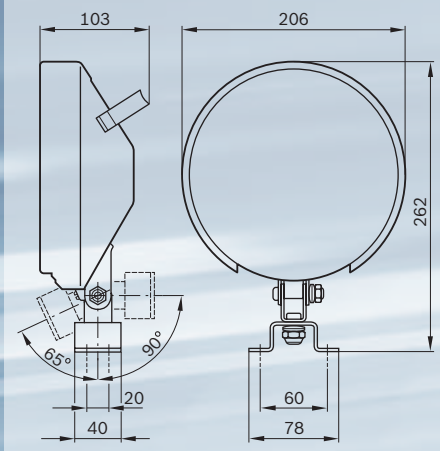

Spot lamp with localized floodlight effect, handle and switch.

Headlamp housing
Steel, black-resicoated, scratch-proof and non-corroding.

Lens
Colorless lens, with waterproof bonding to reflector.

Mounting
Upright and suspended.

Attachment
Pivoting, corrosion-resistant bracket with 4 holes for M 6 bolts

Pivoting range
65° forwards, 90° to rear, 360° lateral.

Electrical connection
Single-pole (separate ground connection provided), blade-terminal connections, cable entry through rubber grommet.

Scope of delivery
In single pack: 1 lamp with assembly parts. Halogen H3 bulb to be ordered separately.

Spot lamp 12 V/55 W

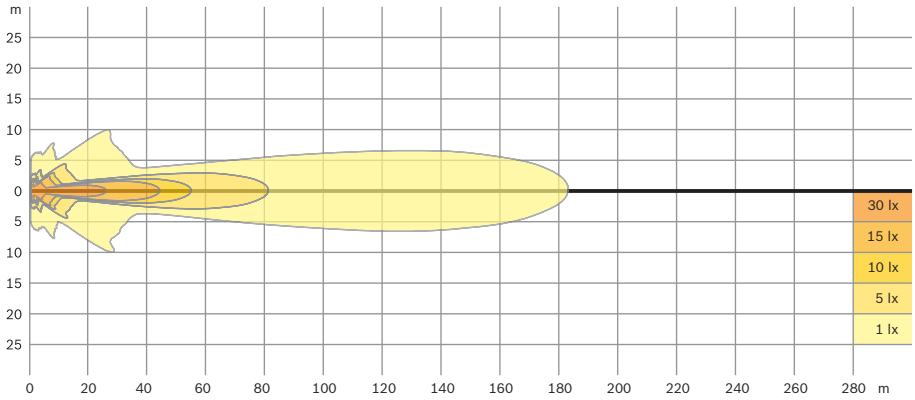

Touring 190	
With handle and switch	**0 306 980 004**

Accessories and spare parts	
Headlight unit	**1 305 313 937**
Fastening bracket	**1 307 022 236**

Type of bulb		
H3	12 V/55 W	**1 987 302 031**
H3	12 V/100 W	**1 987 302 036**
H3	24 V/70 W	**1 987 302 431**

Rotating beacons

Information



Bosch produces a comprehensive range of high-performance beacons for installation in a wide variety of vehicles. Optimized custom solutions further increase the range of applications. In many situations, reliable and effective warning signals are critical to ensure safety for traffic or for working.

The professional range
Top quality for customer groups with exacting demands in terms of warning action and conspicuousness, ease of use and installation, easy single-handed bulb replacement and interference suppression for radio, two-way radio and telephone reception, e.g. fire brigades, haulage companies, road construction departments, rescue services, breakdown and recovery services, mobile cranes and emergency relief services

The standard range
Sturdy warning lamps offering attractive value for money for customer groups in hauling, construction and related trades, agriculture and forestry. Benefits include ease of operation and installation, easy one-handed bulb replacement and radio-interference suppression.

	RKLE 200	RE-60	RSWA/F
Construction			
A	•	•	–
FLX	–	•	–
B1	•	•	•
D	•	•	–
Cover color			
Blue	•	–	–
Yellow	•	•	–
Red	•	–	–
Green	○	–	–
Clear	○	–	•
Voltage			
12 V	•	•	•
24 V	•	•	•
12/24 V	–	–	–
110 V	–	–	–
230 V	–	–	–
Approval			
Complies with German StVZO	•	•	–
Quality features			
Drive system	Hybrid	Worm gear	–
Frequency	–	2.66 Hz	–
Rotational speed	160 rpm	–	–
Noise level	Very low	Medium	–
Interference suppression as per VDE 0879			
LW	Interference level 5	Interference level 3	–
MW	Interference level 5	Interference level 3	–
SW	Interference level 5	Interference level 3	–
UHF	Interference level 5	Interference level 3	–
Degree of protection as per DIN 40 050	IP 54	IP 54	IP 55
Warning effect	Maximum	Satisfactory	–

• = Standard
○ = Possible

RKLE 200 Rotating beacons



The right range
For mobile or fixed mounting, for vehicles that are only fitted with beacons when specifically required, or for vehicles that are in constant use: Version A in line with DIN 14620/ISO 4148 for mounting on spigot tube, version B1 and B2 in line with DIN 14620/ISO 4148 for fixed installation. All yellow and blue lights are type-tested to ECE R65 and approved for use on public highways, while the A, B1 and B2 versions in line with DIN 14620 meet the strict German ∿∿∿ K approval requirements.
The Bosch OPS reflector[1)] ensures optimum utilization and direction of the light beam and provides 40% more light for the same bulb power. This guarantees maximum visibility at close and long range and in hilly terrain, as the light is precisely directed by the OPS reflector and not diffused by the cover. This eliminates scattering losses, which would be worsened by dirt. The long-range visibility and high light intensity enables the RKLE 200 to achieve an unrivalled warning effect even in bright sunlight or from a great distance, comparable even with a high-quality flashing beacon such as the BKL 1212.

The Bosch RKLE 200 – quiet, maintenance-free and long service life.
The RKLE uses a hybrid drive specially developed for continuous use. It combines the quiet and smooth running of a belt drive with the durability and power transmission of a worm drive. Its advantages include maximum convenience, sturdiness and reliability at almost any temperature, when radios or telephones are being used and in dusty or dirty conditions. Since no wearing parts such as V-belts or collector rings are used, no maintenance is required. The self-lubricating bronze sintered bearings of the deliberately oversized motor ensures that the excellent performance and function are retained for many years.

Quick and easy installation thanks to mounting aids and hollow rubber profiles
The rubber seal between the B1/B2 version rotating beacon and the vehicle simultaneously provides a drilling template for the hole diameter in line with DIN 14620 and ISO 4148. The mounting aids accessible from outside provide quick and unobstructed access to the fixing components. After installation, the mounting aids are sealed with the caps supplied to protect against dirt. This eliminates wind noise and corrosion.

Sophisticated ventilation
The patented new ventilation system with labyrinth seal prevents condensation from forming and misting the cover of the light.

No radio interference
Perfect for vehicles with telephone or 2-way radio. The practically noise-free drive is interference-suppressed in excess of the requirements of VDE 0879 interference level 5.

Bulb replacement made easy
The cover can be removed and the defective bulb exchanged with one hand and without the need for tools.

Securing the cover
Fit the cover and turn as far as possible in either direction (bayonet lock). It can be opened with or without a tool.

Perfect look – base in vehicle color
You can, of course, paint the glass-fiber-reinforced base in orange or any other color of your choice.

[1)] OPS, Optimized plane-parabolic segments = "Flat" segments arranged on a parabola.

RKLE 200 Form A Rotating beacon



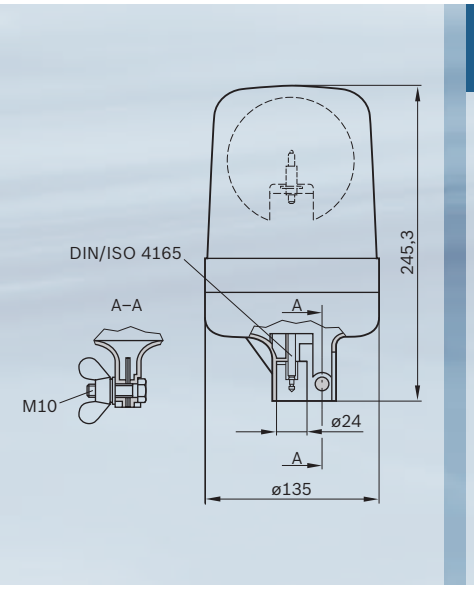

Scope of delivery
Lamp including H1 bulb, installation instructions.

Form A version in line with ISO 4148	
RKLE 200 A, 12 V, yellow	**7 782 332 011**
RKLE 200 A, 24 V, yellow	**7 782 334 009**
RKLE 200 A, 12 V, blue	**7 782 332 209**
RKLE 200 A, 24 V, blue	**7 782 334 207**
RKLE 200 A, 12 V, red	**7 782 332 404**
RKLE 200 A, 24 V, red	**7 782 334 404**

Technical data	
Type test	
Yellow A1 E13 00 0001	∿ K110
Blue B1 E13 00 0001	∿ K109
Weight	
kg	0.82
Resistance to	
Vibration	better than DIN 14620
Temperature	better than DIN 14620
Damp alternating atmosphere	better than DIN 14620
Corrosion	better than DIN 14620
Degree of protection	
IP	54, 54K, 59K
Interference suppression	
Better than VDE 0879 interference level 5	
Ⓔ 10R-023011	
Operating position	
Upright	

Technical data	
Temperature range	
°C	–40...+60
Speed	
rpm	160
Attachment	
On spigot tube with wing nut (no tools)	

Spare parts	
H1 bulb	
12 V/55 W	**1 987 302 011**
24 V/70 W	**1 987 302 411**
Cover	
Yellow	**8 785 510 063**
Yellow, fracture-proof	**8 785 510 098**
Blue	**8 785 510 166**
Red	**8 785 510 065**
Reflector	
	8 785 300 117
Motor with pinion and cable	
12 V	**8 787 220 632**
24 V	**8 787 220 634**
Parts set comprising base plate and gear wheel (assembled) and bulb holder	
	8 787 001 514
Motor-housing parts set	
	8 785 110 129
Rubber buffer (3 required)	
1 unit	**8 780 212 001**

Accessories
Spigot tube for welding
8 787 022 001
Connected via 2 blade terminals 6.3 mm
8 787 022 019
Spigot tube for screw attachment
8 787 022 013
Spigot tube with welded bracket
8 787 022 016

RKLE 200 Form B1 Rotating beacon



Scope of delivery
Lamp including H1 bulb, rubber seal, fastening parts, installation instructions.

Form B1 version in line with DIN 14620/ ISO 4148	
RKLE 200 B1, 12 V, yellow	**7 782 332 011**
RKLE 200 B1, 24 V, yellow	**7 782 334 011**
RKLE 200 B1, 12 V, blue	**7 782 332 207**
RKLE 200 B1, 24 V, blue	**7 782 324 207**
RKLE 200 B1, 12 V, red	**7 782 322 405**
RKLE 200 B1, 24 V, red	**7 782 324 404**

Technical data	
Type test	
Yellow A1 E13 00 0001	∿ K110
Blue B1 E13 00 0001	∿ K109
Weight	
kg	0.76
Resistance to	
Vibration	better than DIN 14620
Temperature	better than DIN 14620
Damp alternating atmosphere	better than DIN 14620
Corrosion	better than DIN 14620
Degree of protection	
IP	54, 54K, 59K
Interference suppression	
Better than VDE 0879 interference level 5	
E1 10R-023011	
Operating position	
Upright	

Technical data	
Temperature range	
°C	–40...+60
Speed	
rpm	160
Attachment	
With 3 bolts, hole circle Ø 130 mm.	

Spare parts	
H1 bulb	
12 V/55 W	**1 987 302 011**
24 V/70 W	**1 987 302 411**
Cover	
Yellow	**8 785 510 063**
Yellow, fracture-proof	**8 785 510 098**
Blue	**8 785 510 166**
Red	**8 785 510 065**
Reflector	
	8 785 300 117
Motor with pinion and cables	
12 V	**8 787 220 632**
24 V	**8 787 220 634**
Parts set comprising base plate and gear wheel (assembled) and bulb holder	
	8 787 001 514
Caps for mounting aids	
3 units	**8 785 411 296**
Rubber seal	
2 mm	**8 780 223 011**
Rubber buffer (3 required)	
1 unit	**8 780 212 001**

Accessories	
Hollow rubber profile to compensate for roof slopes and beads	
	8 780 206 047
Intermediate flange	
	8 785 110 127
Mounting flange	
Straight for stand	**8 785 110 068**
Vehicle stand	
LZU 14/5	**7 781 999 001**
LZU 14/5M	**7 781 999 015**
Plug-in base	
For conversion to version A	**8 785 110 109**

RKLE 200 Form B2 Rotating beacon



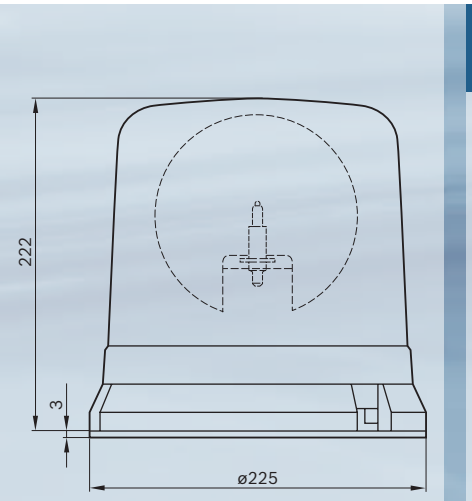

Scope of delivery
Lamp including H1 bulb, rubber seal, fastening parts, installation instructions.

Form B2 version in line with DIN 14620 / ISO 4148	
RKLE 200 B2, 12 V, yellow	**7 782 362 008**
RKLE 200 B2, 24 V, yellow	**7 782 364 007**
RKLE 200 B2, 12 V, blue	**7 782 362 207**
RKLE 200 B2, 24 V, blue	**7 782 364 207**
RKLE 200 B2, 12 V, red	**7 782 362 404**
RKLE 200 B2, 24 V, red	**7 782 364 404**

Technical data	
Type test	
Yellow A1 E1 00 1312	∿ K254
Blue B1 E1 00 1312	∿ K255
Weight	
kg	1.25
Resistance to	
Vibration	better than DIN 14620
Temperature	better than DIN 14620
Damp alternating atmosphere	better than DIN 14620
Corrosion	better than DIN 14620
Degree of protection	
IP	54, 54K, 59K
Interference suppression	
Better than VDE 0879 interference level 5	
Ⓔ 10R-023011	
Operating position	
Upright	

Technical data	
Temperature range	
°C	–40...+60
Speed	
rpm	160
Attachment	
With 3 bolts, hole circle Ø 200 mm.	

Spare parts	
H1 bulb	
12 V/55 W	**1 987 302 011**
24 V/70 W	**1 987 302 411**
Cover	
Yellow	**8 785 510 073**
Blue	**8 785 510 167**
Red	**8 785 510 072**
Reflector	
	8 785 300 120
Motor with pinion and cables	
12 V	**8 787 220 632**
24 V	**8 787 220 634**
Parts set comprising base plate and gear wheel (assembled) and bulb holder	
	8 787 001 514
Caps for mounting aids	
3 units	**8 785 411 297**
Rubber seal	
2 mm	**8 780 223 012**
Rubber buffer (3 required)	
1 units	**8 780 212 001**

Accessories	
Hollow rubber profile to compensate for roof slopes and beads	
	8 780 206 048
Intermediate flange	
	8 785 110 128
Mounting flange	
Straight for stand	**8 785 110 077**
Vehicle stand	
LZU 14/5	**7 781 999 001**
LZU 14/5M	**7 781 999 015**

RKLE 200 Form D Rotating beacon



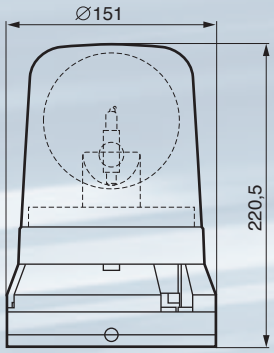

Scope of delivery
Lamp including H1 bulb, magnet, cable and connector, installation instructions.

Form D version in line with ISO 4148	
RKLE 200 D, 12 V, yellow	**7 782 372 004**
RKLE 200 D, 12 V, blue	**7 782 372 204**
RKLE 200 D, 24 V, blue	**7 782 374 203**
RKLE 200 D, 12 V, red	**7 782 372 403**
RKLE 200 D, 24 V, red	**7 782 374 405**
RKLE 200 D, 24 V, yellow	**7 782 374 006**

Technical data		
Type test		
Yellow A1 E13 00 0001		∿ K110
Blue B1 E13 00 0000		∿ K109
Weight		
kg		1.49
Resistance to		
Vibration	better than DIN 14620	
Temperature	better than DIN 14620	
Damp alternating atmosphere	better than DIN 14620	
Corrosion	better than DIN 14620	
Degree of protection		
IP	54, 54K, 59K	
Interference suppression		
Better than VDE 0879 interference level 5		
E1 10R-023011		
Operating position		
Upright		
Temperature range		
°C		–40...+60
Speed		
rpm		160
Attachment		
Magnetic attachment with cable (length 0.5 m, extends to 3 m) and combination connector, TÜV tested to 250 km/h		

Spare parts	
H1 bulb	
12 V/55 W	**1 987 302 011**
24 V/70 W	**1 987 302 411**
Cover	
Yellow	**8 785 510 063**
Yellow, fracture-proof	**8 785 510 098**
Blue	**8 785 510 166**
Red	**8 785 510 065**
Reflector	
	8 785 300 117
Motor with pinion and cable	
12 V	**8 787 220 632**
24 V	**8 787 220 634**
Parts set comprising base plate and gear wheel (assembled) and bulb holder	
	8 787 001 514
Caps for mounting aids	
3 units	**8 785 411 296**
Rubber buffer (3 required)	
1 unit	**8 780 212 001**
Magnetic stand	
	8 787 010 015
Spiral cable with connector	
0.5 m – extends to 3 m	**8 784 460 102**

RE-60 Form A Rotating beacon



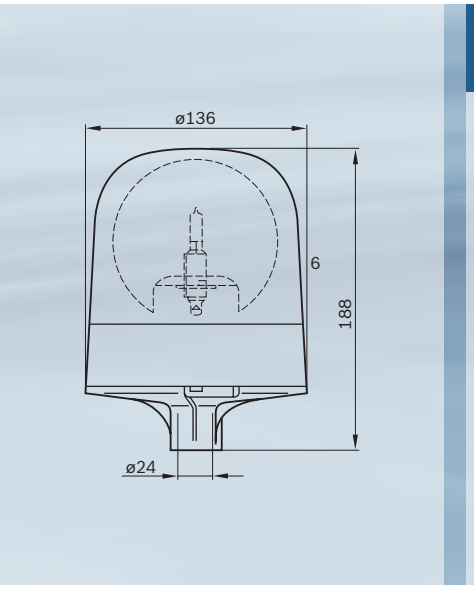

Applications
For special vehicles that are only used sporadically on main roads or in city traffic. Sturdy warning lamp offering attractive value for money for customer groups in hauling, construction and related trades, agriculture and forestry. Benefits include ease of operation and installation, easy one-handed bulb replacement and radio-interference suppression.

Drive system
Robust worm drive ensuring reliable starting under extreme operating conditions

Attachment
For attachment to spigot tube with bolt.

Scope of delivery
Lamp including H1 bulb, installation instructions.

Technical data	
Cover	
Polycarbonate or plexiglass. ECE R65 approval for Germany and Europe. Observe national regulations (e.g. StVZO).	
Weight	
kg	0.43
Flash frequency	
Hz	2.66 A1 E4 006515
Degree of protection	
IP	54, 54K, 59K
Warning effect	
ECE	R65
Radio interference suppression level	
3 in line with VDE 0879 P3	Allows radio reception with no interference. E1 10R-023010

Form A version in line with ISO 4148		
RE-60 Form A		
12 V	Yellow	**7 782 332 008**
24 V	Yellow	**7 782 334 007**

Spare parts	
Plexiglass cover	
Yellow	**8 785 510 156**
H1 halogen bulb	
12 V/55 W	**1 987 302 011**
24 V/70 W	**1 987 302 411**
Motor with worm drive and cables	
12 V	**8 787 220 627**
24 V	**8 787 220 628**

RE-60 Form FLX Rotating beacon



Attachment
With flexible holder for attachment to spigot tube.

Scope of delivery
Light including H1 bulb, installation instructions.

Technical data	
Cover	
Made of fracture-proof polycarbonate	
Weight	
kg	0.68
Max. inclination in case of obstacle contact	
°	90

Form FLX version in line with ISO 4148		
RE-60 Form FLX		
12 V	Yellow	**7 782 332 009**
24 V	Yellow	**7 782 334 008**

Spare parts	
Polycarbonate cover	
Yellow	**8 785 510 157**
Flexible holder with cables	
Connector, clamping fixture	**8 785 110 121**

RE-60 Form B Rotating beacon



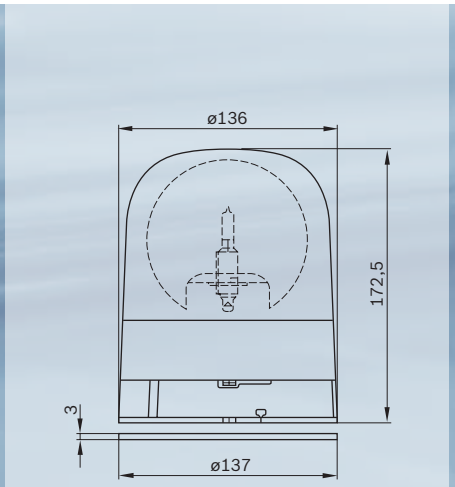

Attachment
Attached with 3 self-tapping screws 4.2 mm (hole circle Ø 130 mm) or with 3 M6 screws (hole circle Ø 115 mm).

Scope of delivery
Lamp including H1 bulb, rubber seal, installation instructions.

Technical data	
Cover	
Fracture-proof polycarbonate.	
For permanent installation.	
Weight	
kg	0.42

Form B version in line with ISO 4148		
RE-60 Form B		
12 V	Yellow	**7 782 322 012**
24 V	Yellow	**7 782 324 012**

Spare parts	
Plexiglass cover	
Yellow	**8 785 510 156**
Caps for mounting aids (x3)	**8 787 001 322**

RE-60 Form D Rotating beacon



Connection
With 3.5 m spiral cable and multi-purpose automotive connector.

Attachment
Attached with strong magnet (approx. 30 kg adhesive force in line with DIN). For vehicle speeds of up to max. 100 km/h.

Scope of delivery
Lamp including H1 bulb, spiral cable with connector, installation instructions.

Technical data		
Cover		
Fracture-proof polycarbonate. For permanent installation.		
Weight		
kg		approx. 1

Form D version in line with ISO 4148		
RE-60 Form D		
12 V	Yellow	**7 782 372 003**
24 V	Yellow	**7 782 374 005**

Spare parts	
Plexiglass cover	
Yellow	**8 785 510 156**
Flexible holder with cables	
Spiral cable with multi-purpose automotive connector	**8 784 460 130**

Accessories	
Paint-protection foil for magnet, self-adhesive	**8 780 113 024**

RSWA 100/RSWF 100 Floodlight



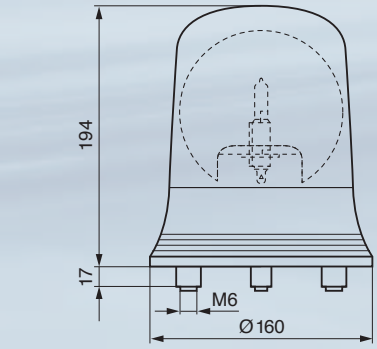

Applications
Flood lamp (RSWA) or spot lamp (RSWF) with radio remote control for police, emergency services, breakdown and recovery services, agricultural vehicles and off-road applications.

Design
Fiberglass reinforced plastic, matte black surface. Impact-resistant, non-corroding, and fracture-proof.

Headlight unit
The radio remote control allows targeted direction of the floodlight beam. Simultaneous horizontal and vertical movement allows the operator to quickly adjust the lighting as required, even from a distance (range with unimpaired view approx. 100 m).
Coding allows one floodlight to be operated from up to four remote control units. In the same way, one remote control unit can operate different floodlights.

Light distribution
RSWA – large-area, uniform illumination at close range (floodlamp)
RSWF – narrow, high-intensity light beam (spot lamp)

Attachment
Attached with 3 bolts, hole circle ø 130 mm.

Scope of delivery
Lamp including H1 bulb, remote control, 9 Volt battery 6LR61, installation/operating instructions.

Lamp technical data:	
Cover	
Polycarbonate	
Weight	
kg	1.13
Current input	
12 V/4.6 A 24 V/2.9 A	
Temperature range	
°C	–20...+50
Horizontal rotation	
°	360 in 12 seconds
Vertical rotation	
°	260 in 24 seconds
Dust / water protection	
IP	55

Remote-control technical data:	
Frequency	
Hz	433.92
Range	
m	100 with unimpaired view
Weight	
kg	Approx. 0.15
Approval	
CE tested	
EN	60-950, 300-220
Ets	300-000

Design	
RSWA 100, 12 V	**7 782 319 052**
RSWA 100, 24 V	**7 782 319 054**
RSWF 100, 12 V	**7 782 319 062**
RSWF 100, 24 V	**7 782 319 064**

Spare parts	
Cover	
Clear	**8 785 510 170**
Transmitter and holder	
12 V	**8 785 520 002**
24 V	**8 785 520 004**
H1 bulb	
12 V/55 W	**1 987 302 011**
24 V/70 W	**1 987 302 411**

Accessories	
Mounting flange	
Straight, for stand	**8 785 110 068**
Vehicle stand LZU 14/5	**7 781 999 001**
Vehicle stand LZU 14/5 M	**7 781 999 015**

Accessories and spare parts

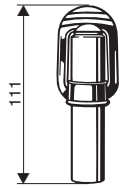

Spigot tube

For welding, for Form A rotating beacons in line with DIN 14 620 and ISO 4148.
With socket and rain cover. Grounded through housing.
Part number:
8 787 022 001

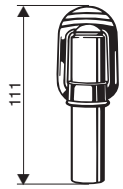

Spigot tube

As –001, but connected via 2 blade terminals 6.3 mm. With insulating sleeve (Qty. 1).
Part number:
8 787 022 019

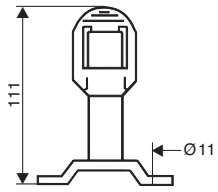

Spigot tube

With welded bracket for Form A rotating beacons in line with DIN 14 620 and ISO 4148.
For screwing onto the vehicle with 2 screws. With socket and rain cover.
Part number:
8 787 022 016

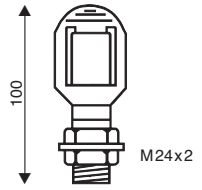

Spigot tube

For screw fastening, for Form A rotating beacons in line with DIN 14 620 and ISO 4148.
With socket and rain cover.
Part number:
8 787 022 013

Rain cover

To fit the spigot tubes.
Part number:
8 780 560 000



Magnetic stand

For RKLE 200 Form D rotating beacons for speeds of up to 250 km/h.
The use of rotating beacons with additional magnetic base mounting is not approved in Germany (StVZO). Exceptions can be approved by the relevant authorities.
The operator must apply individually.
Part number:
8 787 010 015

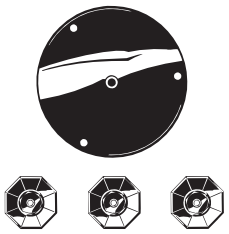

3-point magnetic attachment

For RKLE Form B1 rotating beacons. For mobile or temporary use.
The magnetic feet are flexibly mounted and thus adapt to the shape of the vehicle body.
Supplied with protective foil to prevent damage to the body.
For vehicle speeds of up to max. 80 km/h.
Part number:
8 787 010 011

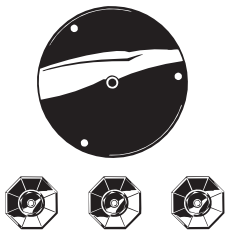

3-point magnetic attachment

As ...011 but with spiral cable (max. length 3 m) and universal connector for vehicle socket or cigarette lighter. For vehicle speeds of up to max. 80 km/h.
Part number:
8 787 010 010

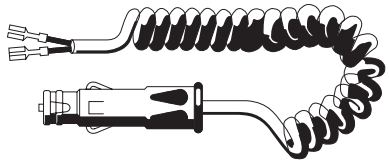

Spiral cable

Complete with universal connector for vehicle socket or cigarette lighter, and connectors.
Length 0.5 m, extends to 3 m.
Part number:
8 784 460 102

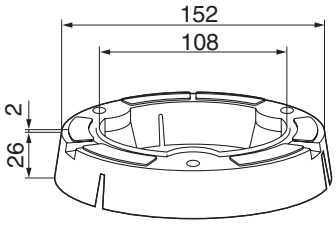

Rubber wedge

For RKLE Form B1 rotating beacons. To compensate for roof slopes.
Part number:
8 780 206 047

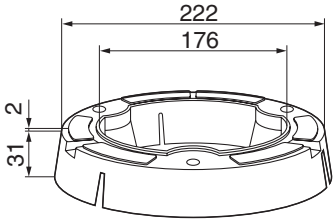

Rubber wedge

For RKLE Form B2 rotating beacons. To compensate for roof slopes.
Part number:
8 780 206 048

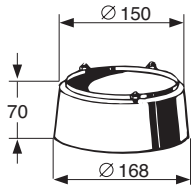

Intermediate flange

For RKLE Form B1 rotating beacons. Steel plate.
Compensates for extremely steep mounting surfaces (adjust flange and weld).
Part number:
8 785 110 127

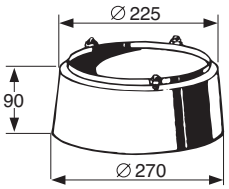

Intermediate flange

For RKLE Form B2 rotating beacons. Steel plate.
Compensates for extremely steep mounting surfaces (adjust flange and weld).
Part number:
8 785 110 128

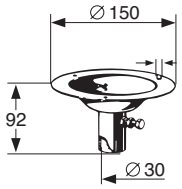

Mounting flange, straight

For RKLE Form B1 rotating beacons. For fitting on vehicle stand LZU 14/5.
Part number:
8 785 110 068

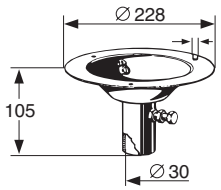

Mounting flange, straight

For RKLE Form B2 rotating beacons. For fitting on vehicle stand LZU 14/5.
Part number:
8 785 110 077

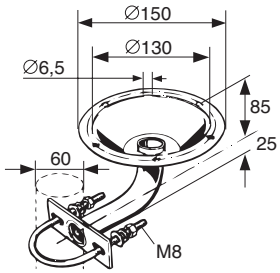

Mounting flange, angled

For RKLE Form B1 rotating beacons. For attachment to vertical surface or mast, Ø 60 mm.
Part number:
8 785 110 099

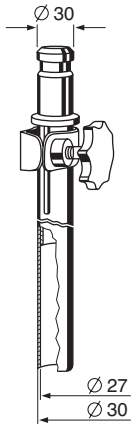

Vehicle stand LZU 14/5

For attaching headlamps and rotating beacons.
Design: Mounting stud Ø 30 mm in line with DIN 14 640.
Can be used with: Mounting flange 8-785 110 068/077 for rotating beacons.
Extends from 1260 mm to 2160 mm. Lockable with star handle.
Dimensions (W x H): 140 x 1260 mm, weight: 2.8 kg
Part number:
7 781 999 001

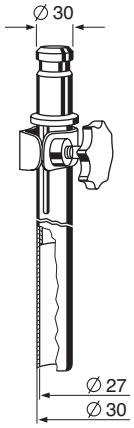

Vehicle stand LZU 14/5 M

Similar to 7 781 999 001. Extends from 1060 to 1890 mm.
Cable entry through mounting stud, allowing visually appealing installation.
Dimensions (W x H): 140 x 1,060 mm
Part number:
7 781 999 015

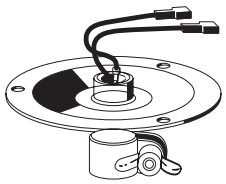

Mounting flange for bolting to RKLE BKL Form B1

With plug-in base and cable. Allows mounting on spigot tube for Form A.
Part number:
8 785 110 109

Headlight units

4 x 6″ Low beam with H1 side-marker lamp



Technical features
With polyellipsoid low beam. Interchangeable with 4 x 6″ sealed-beam unit. Fits in SAE headlamp-housing assembly. With side-marker lamp, with protective rubber cap.

Lens
Colorless lens, with waterproof bonding to reflector.

H1-PES low-beam unit	
For installation on left	**0 301 740 011**
For installation on right	**0 301 740 012**

Type of bulb		
H1	12 V/55 W	**1 987 302 011**
H1	24 V/70 W	**1 987 302 411**
T 4 W	12 V/4 W	**1 987 302 207**
T 4 W	24 V/4 W	**1 987 302 512**

4 x 6″ Low beam H1



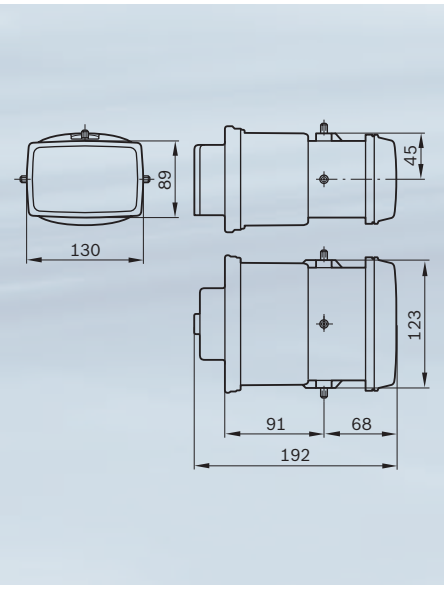

Technical features
Without side-marker lamp, dimensions 89 x 123 x 192 mm.

Headlamp housing
Plastic, impact-resistant and fracture-proof.

Lens
Colorless lens, with waterproof bonding to housing. Steel reflector.

Attachment
With 3 M6 threaded studs (see dimensional drawing).

Electrical connection
Two-pole, blade-terminal connections. With protective rubber cap with ventilation opening.

H1-PES low-beam unit		
		0 301 340 002

Type of bulb		
H1	12 V/55 W	**1 987 302 011**
H1	24 V/70 W	**1 987 302 411**

4 x 6″ Fog lamp H1



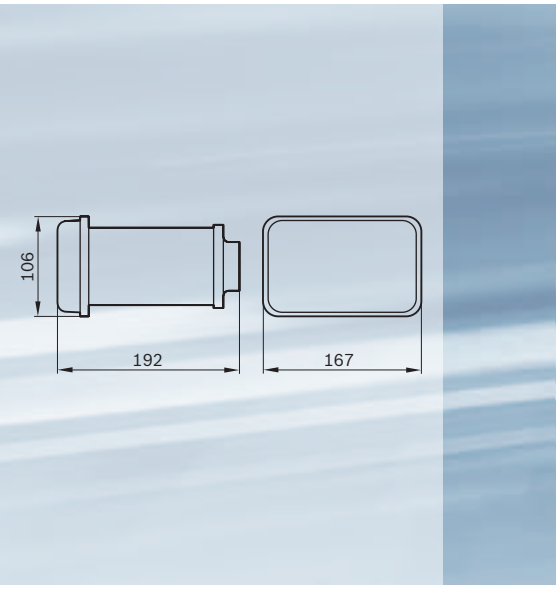

Technical features
With polyellipsoid fog lamp. Interchangeable with 4 x 6″ sealed-beam unit. Fits in SAE headlamp-housing assembly. With protective rubber cap.

Lens
Colorless lens, with waterproof bonding to reflector.

H1-PES fog-lamp unit		
		0 305 121 001

Type of bulb		
H1	12 V/55 W	**1 987 302 011**
H1	24 V/70 W	**1 987 302 411**

4 x 6″ Upper beam H1



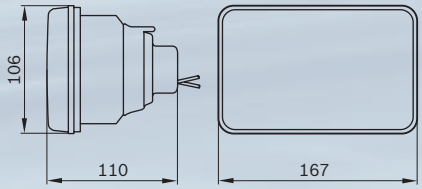

Technical features
Interchangeable with 4 x 6″ sealed-beam unit. Fits in SAE headlamp-housing assembly. Without side-marker lamp. With protective rubber cap.

Lens
Colorless lens, with waterproof bonding to reflector.

H1 High-beam unit		
Without side-marker lamp.		**0 301 709 001**

Type of bulb		
H1	12 V/55 W/60 W	**1 987 302 011**
H1	24 V/70 W/75 W	**1 987 302 411**

Four-headlamp system

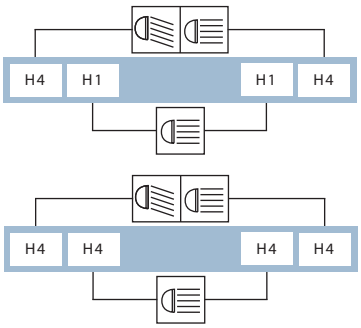

4 x 6″ High beam and high/low beam H1/H4

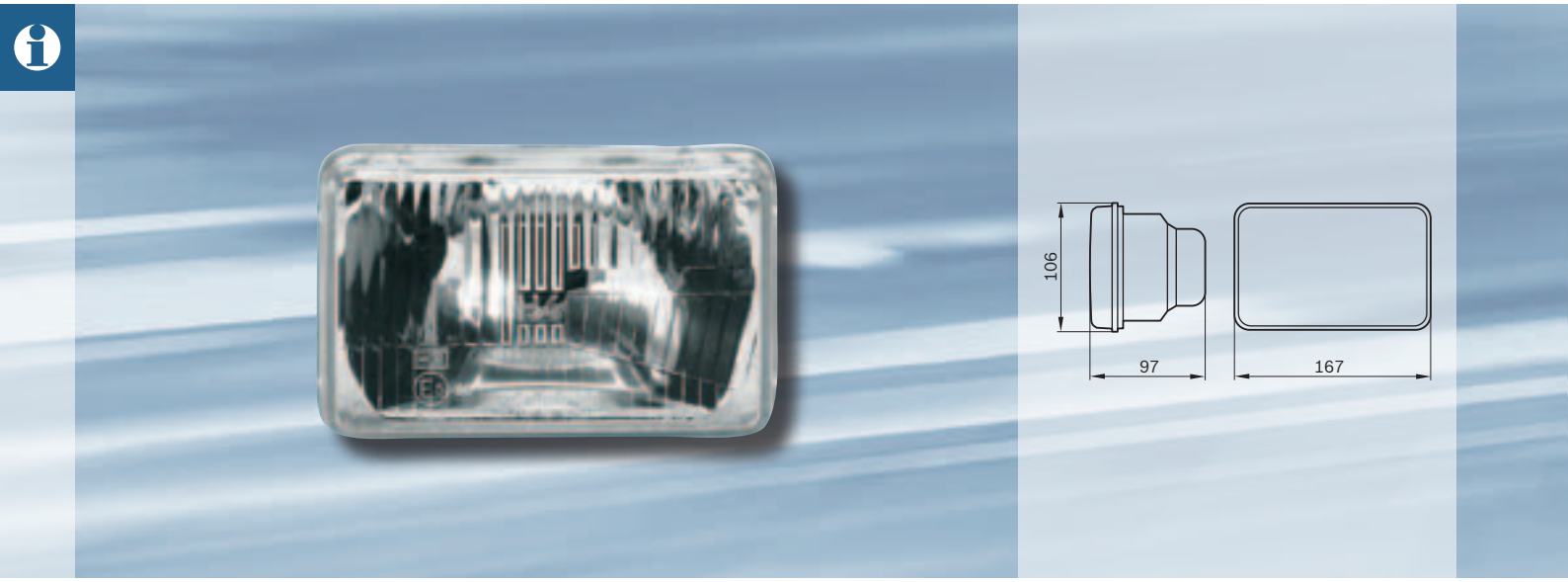

Technical features
Interchangeable with 4 x 6″ sealed-beam unit. Fits in SAE headlamp-housing assembly. With or without side-marker lamp. With protective rubber cap.

Lens
Colorless lens, with waterproof bonding to reflector.

H4 High-beam unit	
Without side-marker lamp.	**0 301 709 102**

H4 High/low-beam unit	
With side-marker lamp.	**0 301 709 101**
Without side-marker lamp.	**0 301 709 100**
	0 301 709 800[1)]

Accessories and spare parts	
Socket for side-marker lamp bulb	
	1 300 636 099

Type of bulb		
H4	12 V/55 W/60 W	**1 987 302 011**
H4	24 V/70 W/75 W	**1 987 302 411**
T 4 W	12 V/4 W	**1 987 302 207**
T 4 W	24 V/4 W	**1 987 302 512**

Four-headlamp system

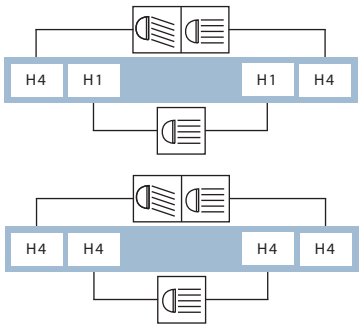

[1)] 2 units in SB packaging.

92 x 150 mm Low beam H4



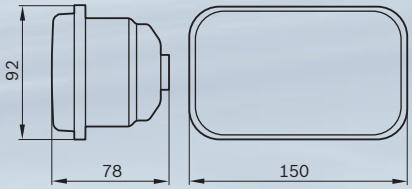

Technical features
For high beam, low beam and high/low beam. Interchangeable with 92 x 150 mm sealed-beam unit. Fits in SAE headlamp-housing assembly. Low-beam headlamp with side-marker lamp.

Lens
Colorless lens, with waterproof bonding to reflector.

Scope of delivery
H4 bulb and side-marker lamp bulb included.

H4 Low-beam unit	
With side-marker lamp, with protective cap.	**0 301 305 100**
Without side-marker lamp, with protective cap.	**0 301 305 104**[1)]

Accessories and spare parts	
Three-pole socket for H4 bulbs.	
With spring terminals	**1 304 485 004**
With blade terminal	**1 304 485 401**

Type of bulb (for spares)		
H4	12 V/55 W/60 W	**1 987 302 011**
H4	24 V/70 W/75 W	**1 987 302 411**
T 4 W	12 V/4 W	**1 987 302 207**
T 4 W	24 V/4 W	**1 987 302 512**

Four-headlamp system

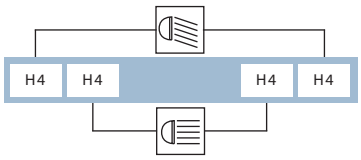

[1)] Available while stocks last.

92 x 150 mm High beam H4

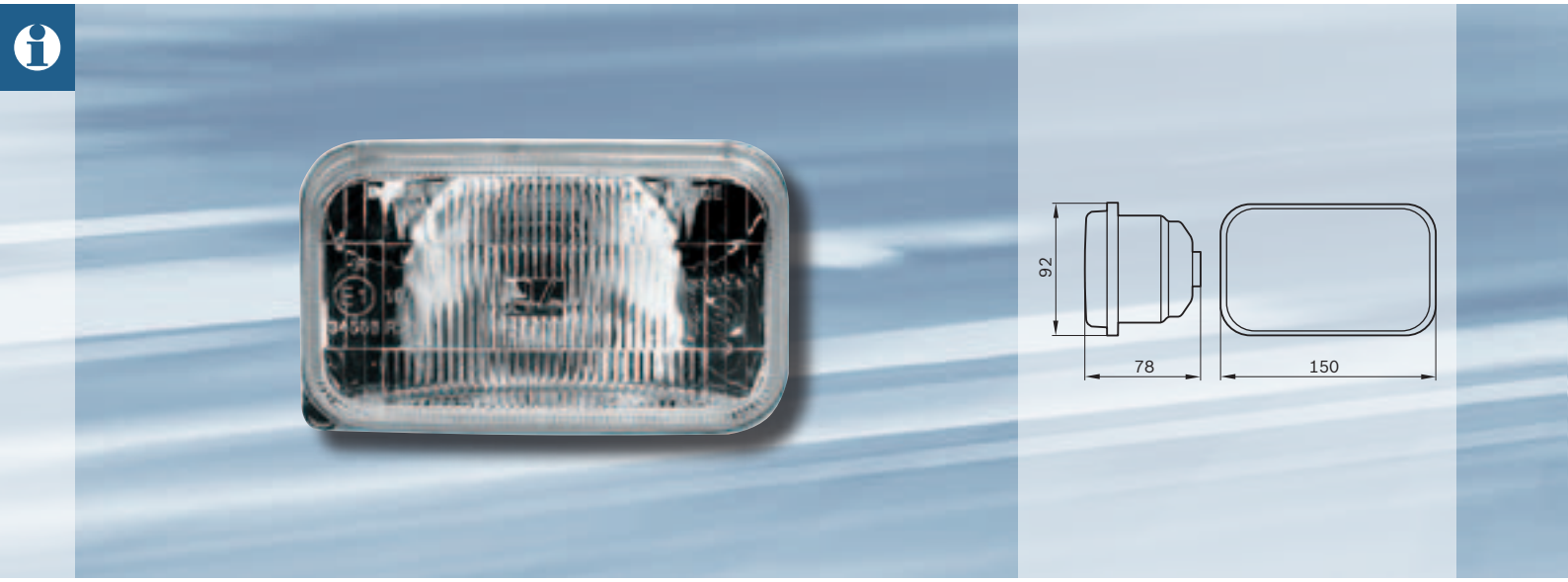

Technical features
For high beam, low beam and high/low beam. Interchangeable with 92 x 150mm sealed-beam unit. Fits in SAE headlamp-housing assembly. Low-beam headlamp with side-marker lamp.

Lens
Colorless lens, with waterproof bonding to reflector.

Scope of delivery
H4 bulb and side-marker lamp bulb included.

H4 High-beam unit	
Without side-marker lamp, with protective cap.	**0 301 305 102**

Accessories and spare parts	
Three-pole socket for H4 bulbs.	
With spring terminals	**1 304 485 004**
With blade terminal	**1 304 485 401**

Type of bulb (for spares)		
H4	12 V/55 W/60 W	**1 987 302 011**
H4	24 V/70 W/75 W	**1 987 302 411**
T 4 W	12 V/4 W	**1 987 302 207**
T 4 W	24 V/4 W	**1 987 302 512**

Four-headlamp system

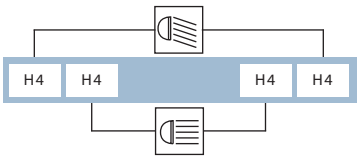

200 x 142 mm High/low beam H4



Technical features
For high/low beam. Interchangeable with 200 x 142 mm sealed-beam unit. Fits in SAE headlamp-housing assembly. With or without side-marker lamp.

Lens
With protective rubber cap. Colorless lens, with waterproof bonding to reflector.

H4 High/low-beam unit	
With side-marker lamp.	**0 301 019 101**
Without side-marker lamp.	**0 301 019 100**
	0 301 019 800[1)]

Type of bulb		
H4	12 V/55 W/60 W	**1 987 302 041**
H4	24 V/70 W/75 W	**1 987 302 441**
T 4 W	12 V/4 W	**1 987 302 207**
T 4 W	24 V/4 W	**1 987 302 512**

Two-headlamp system

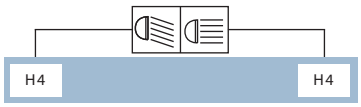

[1)] 2 units in SB packaging.

5¾″ High beam H1



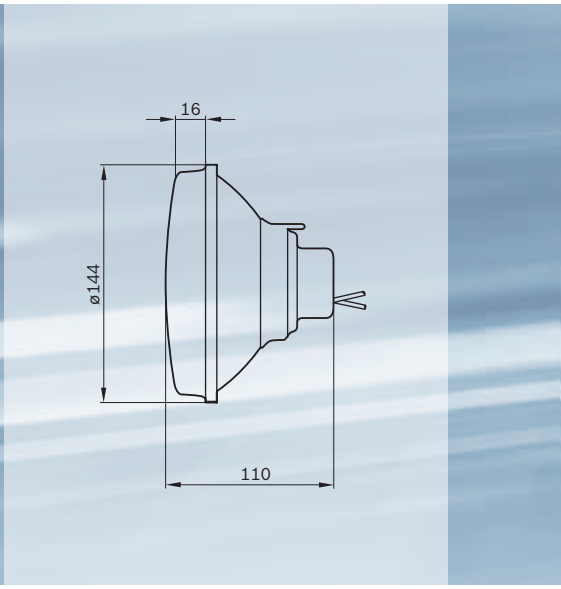

Technical features
For high beam, low beam and high/low beam. Interchangeable with 5 ¾″ or 7″ sealed-beam unit. Fits in SAE headlamp-housing assembly. Without side-marker lamp.

Lens
Flat, colorless, protruding lens with water-proof bonding to reflector.

H1 High-beam unit		
Electrical connection: Connector, 2-pole		
Without side-marker lamp, with protective cap. Fits H4 high-beam unit 0 301 302 101, ... 102		**0 301 303 034**

Type of bulb		
H1	12 V/55 W	**1 987 302 011**
H1	24 V/70 W	**1 987 302 411**

Two-headlamp system

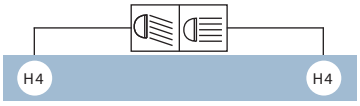

Four-headlamp system

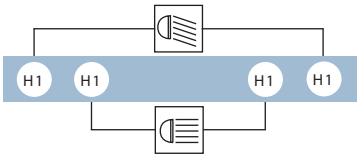

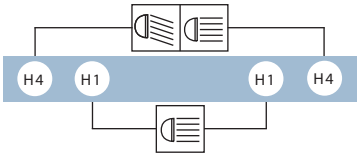

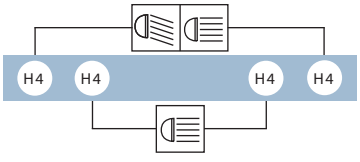

5¾″ High beam H4



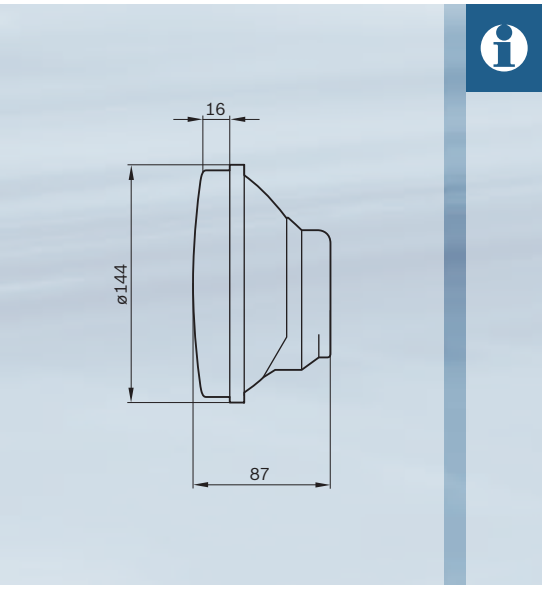

Technical features
With flat, protruding lens, without side-marker lamp, with protective cap.

Lens
Colorless lens.

H4 High-beam unit	
Without side-marker lamp, with protective cap.	**0 301 302 103**

Accessories and spare parts	
Socket for side-marker lamp bulb	**1 300 636 036**
Three-pole socket for H4 bulbs.	
With spring terminals	**1 304 485 004**
With blade terminal	**1 304 485 401**

Type of bulb		
H4	12 V/55 W/60 W	**1 987 302 041**
H4	24 V/70 W/75 W	**1 987 302 441**

5¾″ High/low beam H4

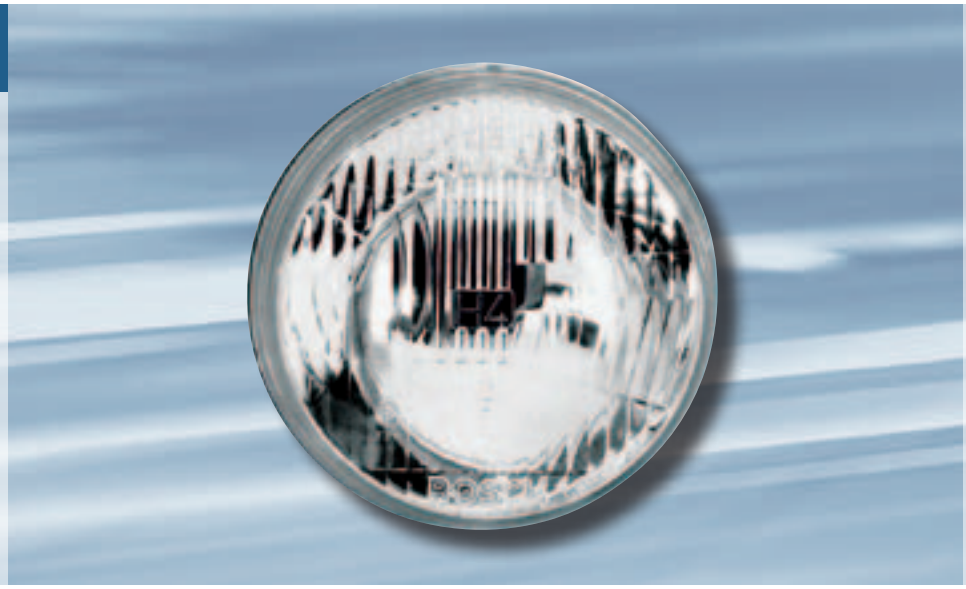

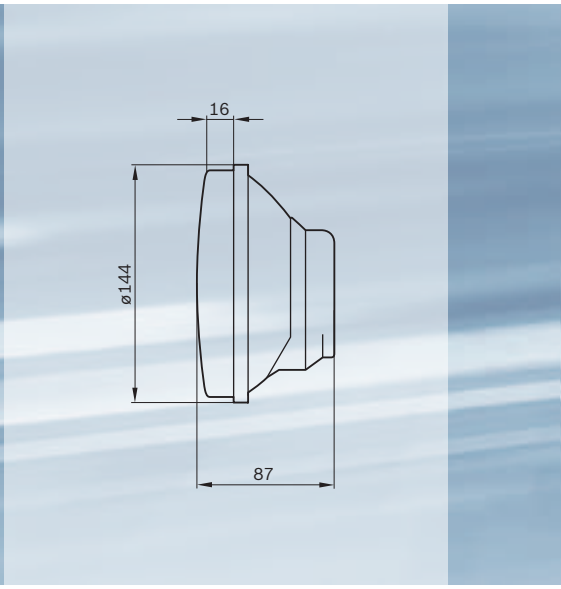

Technical features
With flat, protruding lens, with or without side-marker lamp, with protective cap.

Lens
Colorless lens.

H4 High/low-beam unit	
With side-marker lamp, with protective cap.	**0 301 302 102**
Without side-marker lamp, with protective cap, fits H1 upper-beam unit 0 301 303 034	**0 301 302 101**

Accessories and spare parts	
Socket for side-marker lamp bulb	**1 300 636 036**
Three-pole socket for H4 bulbs.	
With spring terminals	**1 304 485 004**
With blade terminal	**1 304 485 401**

Type of bulb		
H4	12 V/55 W/60 W	**1 987 302 041**
H4	24 V/70 W/75 W	**1 987 302 441**
T 4 W	12 V/4 W	**1 987 302 207**
T 4 W	24 V/4 W	**1 987 302 512**

7″ High/low beam H4



Technical features
Interchangeable with 7″ sealed-beam unit.
Fits in SAE headlamp-housing assembly.
With or without side-marker lamp.

Lens
Flat, colorless lens, waterproof bonding to reflector.

H4 High/low-beam unit	
With side-marker lamp.	**0 301 600 110**
Without side-marker lamp.	**0 301 600 107**

Accessories and spare parts	
Three-pole socket for double-filament H4 bulbs in high/low-beam headlamps	
With spring terminals	**0 304 485 004**
With blade terminal	**0 304 485 401**

Type of bulb		
H4	12 V/55 W/60 W	**1 987 302 041**
H4	24 V/70 W/75 W	**1 987 302 441**
T 4 W	12 V/4 W	**1 987 302 207**
T 4 W	24 V/4 W	**1 987 302 512**

7″ High/low beam R2

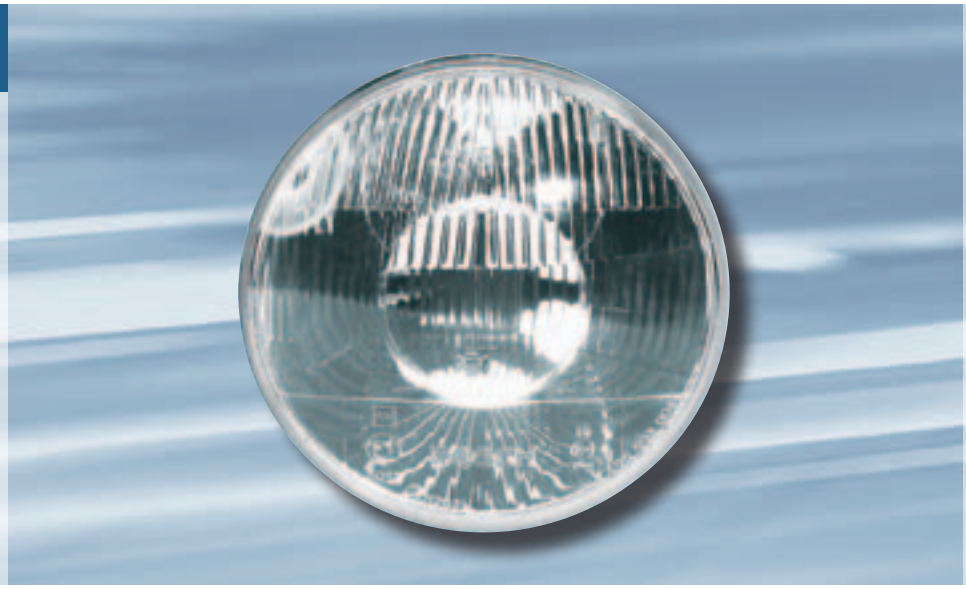

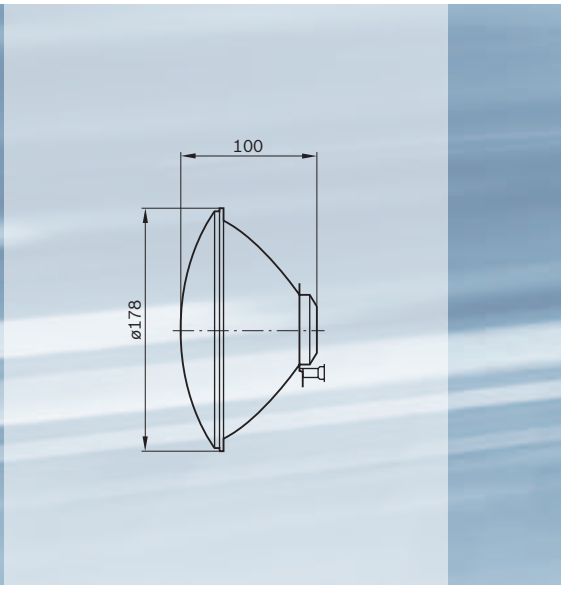

Technical features
Interchangeable with 7″ sealed-beam unit. Fits in SAE headlamp-housing assembly.

Lens
Colorless lens, with waterproof bonding to reflector.

R2 High/low-beam unit	
With side-marker lamp, without protective cap.	**0 301 600 015**

Accessories and spare parts	
Three-pole socket for double-filament R2 bulbs in high/low-beam headlamps	
With spring terminals	**0 304 485 004**
With blade terminal	**0 304 485 401**

Type of bulb		
R2	12 V/40 W/45 W	**1 987 302 023**
R2	24 V/50 W/55 W	**1 987 302 411**
T 4 W	12 V/4 W	**1 987 302 207**
T 4 W	24 V/4 W	**1 987 302 512**

Headlamp-housing assemblies

4 x 6″ Headlamp-housing assembly

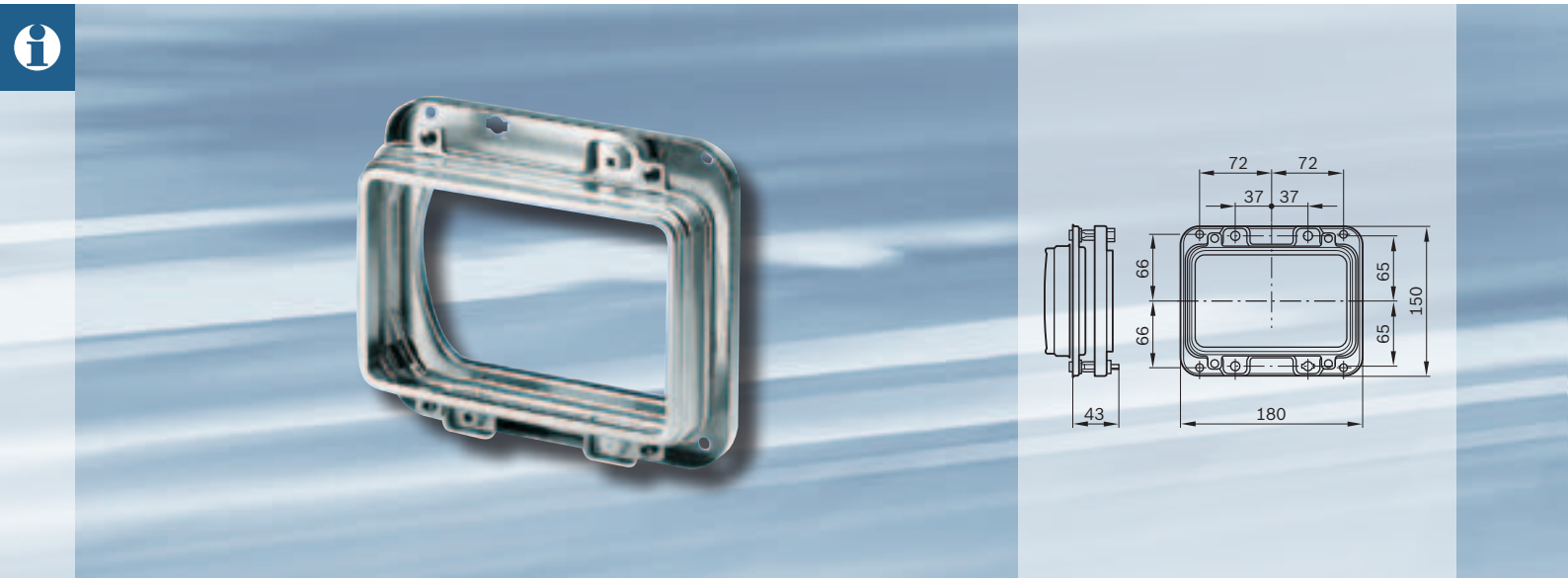

Four-headlamp system in line with DOT guidelines.

Technical features
For installation in vehicle body, for mounting a 4 x 6″ low-beam unit or a high-beam unit.

Headlamp rim
With gray resicoated support frame. Support, support frame and intermediate frame made of galvanized steel.

Attachment
Unit is held in the intermediate frame by four screws in the outer rim.

Headlamp adjustment
From front.

4 x 6″ Headlamp-housing assembly	
For low beam	**0 302 703 007**
For high beam	**0 302 703 008**

Accessories and spare parts	
Outer rim	**1 305 540 121**

4 x 6″ Dual headlamp-housing assembly

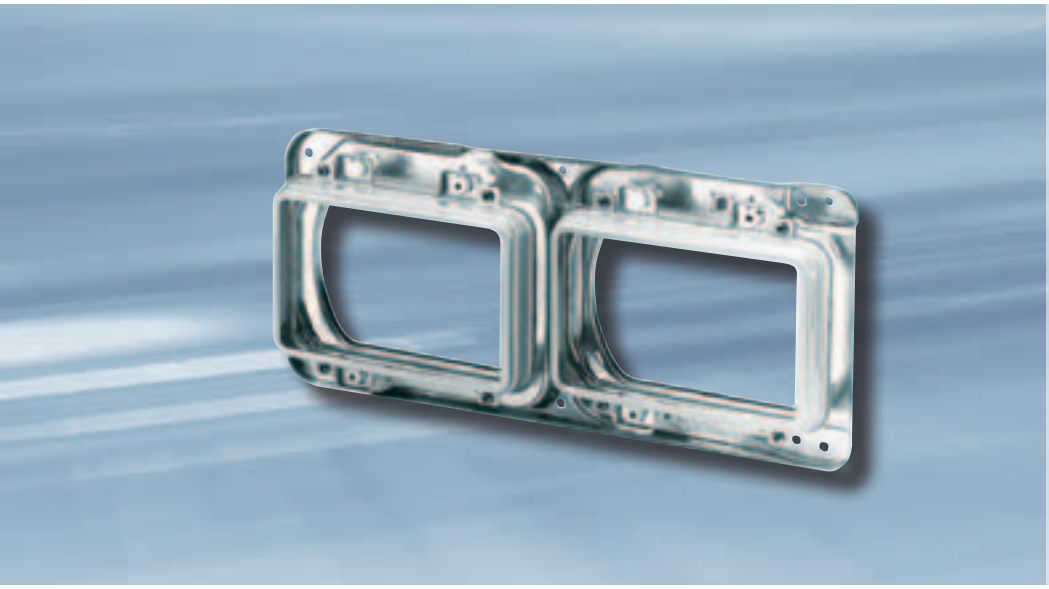

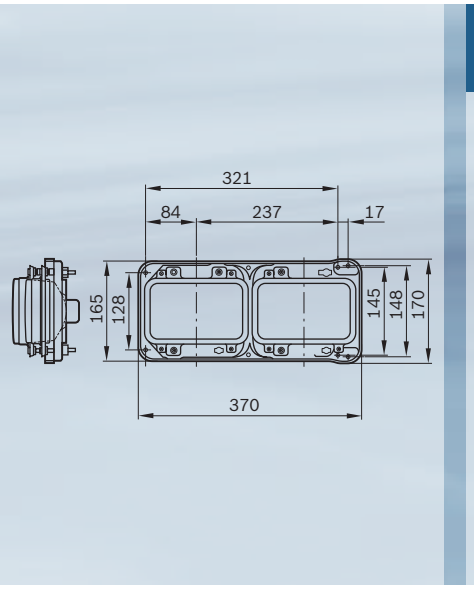

Four-headlamp system in line with DOT guidelines.

Technical features
For installation in vehicle body, for mounting one 4 x 6″ low-beam unit and one high-beam unit.

Headlamp frame
With gray resicoated support frame. Support, support frame and intermediate frame made of galvanized steel.

Attachment
Units are held in the intermediate frame by four screws each in the outer rim.

Headlamp adjustment
From front.

4 x 6″ Headlamp-housing assembly	
For installation on left	**0 302 703 001**
For installation on right	**0 302 703 002**

Accessories and spare parts	
Outer rim	**1 305 540 121**

5¾″ Dual headlamp-housing assembly



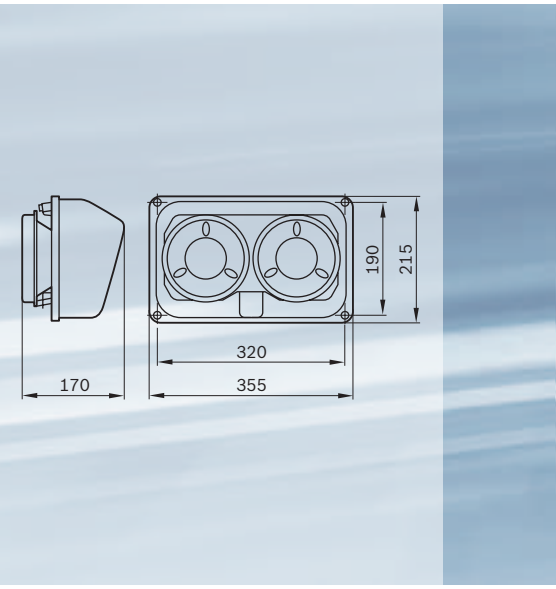

Four-headlamp system

Technical features
For installation in vehicle body, for mounting one 5¾″ low-beam unit and one high-beam unit.

Headlamp frame
Support, support frame and adjusting shell made of galvanized steel. Black polyamide housing (non-corroding, impact-resistant and fracture-proof). Units are held in the adjusting shells by black-resicoated outer rims with two screws each.

Attachment
With four screws (holes in housing Ø 8.5 mm).

Headlamp adjustment
From front.

5¾″ Headlamp-housing assembly	
With housing	
For installation on left	**0 302 300 003**
For installation on right	**0 302 300 004**
Without housing	
For installation on left	**0 302 300 005**
For installation on right	**0 302 300 006**

Accessories and spare parts	
2 outer rims	**1 305 501 133**

7″ headlamp-housing assembly



Two-headlamp system

Technical features
For installation in vehicle body, for mounting 7″ headlight units.

Headlamp frame
Support frame and adjusting shell made of galvanized steel. Unit is held in adjusting shell by retaining ring and three screws.

Headlamp adjustment
From front.

7″ Headlamp-housing assembly	
With primed outer rim	**0 302 601 008**

Accessories and spare parts	
2 outer rims	**1 305 501 133**

External-fitting main headlamps

105 mm Low-beam headlamp / high/low-beam headlamp



High-beam headlamp / high/low-beam headlamp, Ø 105 mm, with symmetrical low beam, for vehicles up to max. 30 or 40 km/h, with side-marker lamp.

Headlamp housing
With steel outer rim, black-resicoated.

Lens
Colorless lens.

Electrical connection
Cable entry through mounting base, connection to screw terminals.

Headlamp adjustment
Using all-direction pivoting mounting base.

Attachment
Using ball-type base with hollow threaded stud M12 x 1.5, 45 mm long.

Symmetrical low-beam headlamp, for vehicles up to max. 30 km/h.	
Upright mounting	**0 304 103 001**

Accessories and spare parts	
Lens	**1 305 600 010**
Sealing gasket	**1 300 212 017**
Reflector	**1 305 300 001**

Type of bulb		
	12 V/15 W	**Osram 7533**
	24 V/15 W	**Osram 7529**
T 4 W	12 V/4 W	**1 987 302 207**
T 4 W	24 V/4 W	**1 987 302 512**

Symmetrical high/low-beam headlamp, for vehicles up to max. 40 km/h.	
Upright mounting	**0 300 181 003**

Accessories and spare parts	
Lens	**1 305 600 040**
Sealing gasket	**1 300 212 017**
Reflector	**1 305 300 001**

Type of bulb		
F2	12 V/35 W/35 W	**Osram 7327**
F2	24 V/45 W/40 W	**Osram 7360**
T 4 W	12 V/4 W	**1 987 302 207**
T 4 W	24 V/4 W	**1 987 302 512**

144 mm High/low-beam headlamp H4



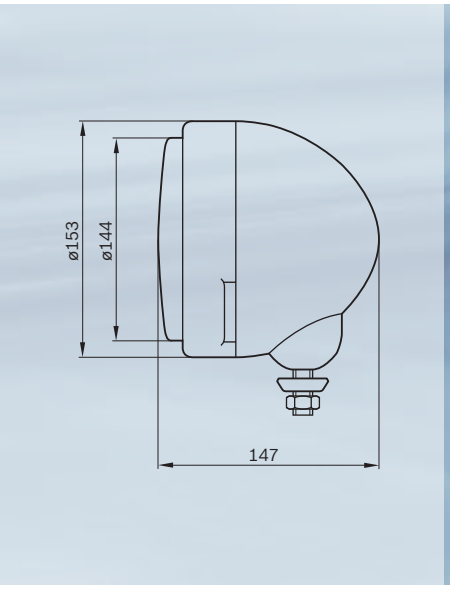

H4 external-fitting headlamp, extremely robust and vibration-resistant, with side-marker lamp.

Technical features
For heavy-duty applications, e.g. construction vehicles.

Headlight unit
Interchangeable with 5¾" units or original sealed-beam units.

Lens
Colorless, with waterproof bonding to reflector, held in housing by removable rubber sealing gasket (vibration damping).

Headlamp housing
Steel, black-resicoated.

Cable entry
Through rubber grommet. Headlamp adjustment using all-direction pivoting base.

Mounting
Upright, suspended and side-mounted.

Attachment
Using ball-type base with M12 threaded stud, 26 mm long.

H4 External-fitting headlamp		
		0 301 304 100
Housing and sealing gasket (without unit) fits all 5¾" units		**1 305 122 901**

Accessories and spare parts		
Headlight unit		**0 301 302 102**
Sealing gasket		**1 301 015 115**

Type of bulb		
H4	12 V/55 W/60 W	**1 987 302 041**
H4	24 V/70 W/75 W	**1 987 302 441**
T 4 W	12 V/4 W	**1 987 302 207**
T 4 W	24 V/4 W	**1 987 302 512**

160 mm High/low-beam headlamp H4



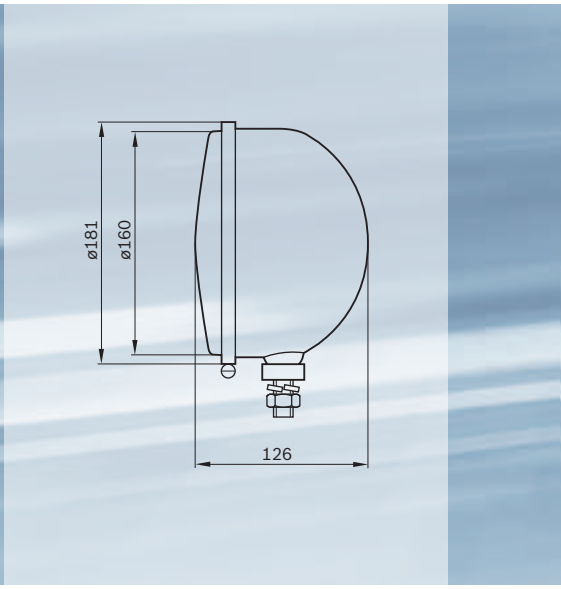

H4 external-fitting headlamp, suitable for painting, with side-marker lamp.

Technical features
For heavy-duty applications, e.g. construction vehicles.

Headlamp housing
Steel, painted gray, chrome-plated outer rim.

Lens
Colorless, waterproof bonding to reflector.

Electrical connection
Cable entry through hollow bolt. Three-pole socket for electrical connection supplied.

Headlamp adjustment
Using all-direction pivoting ball-type base.

Mounting
Upright.

Attachment
Using ball-type base with hollow threaded stud M14 x 1.5, 30 mm long.

H4 External-fitting headlamp		
		0 301 680 101

Type of bulb		
H4	12 V/55 W/60 W	**1 987 302 041**
H4	24 V/70 W/75 W	**1 987 302 441**
T 4 W	12 V/4 W	**1 987 302 207**
T 4 W	24 V/4 W	**1 987 302 512**

170 mm High/low-beam headlamp H4



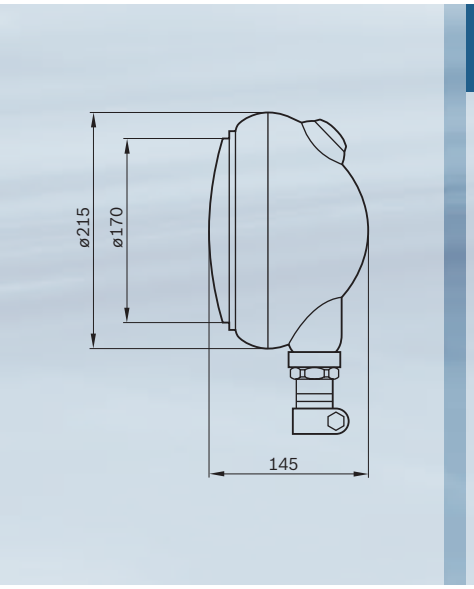

H4 external-fitting headlamp, olive green, for off-road vehicles, without side-marker lamp.

Technical features
Submersible up to max. 1.5 m.
With vibration-damped mounting base.
Headlight unit interchangeable with 7” units or original sealed-beam units.

Headlamp housing
With steel outer rim, painted olive green.

Lens
Colorless, waterproof bonding to reflector. With protective cap providing waterproof seal for reflector on bulb holder.

Electrical connection
Cable entry through rubber grommet.

Headlamp adjustment
Using two adjusting screws in outer rim.

Mounting
Vertical, upright or suspended.

Attachment
With vibration-damped mounting base, hole Ø 24 mm.

H4 External-fitting headlamp		
		0 301 603 100

Accessories and spare parts		
Headlight unit		**0 305 303 103**

Type of bulb		
H4	12 V/55 W/60 W	**1 987 302 041**
H4	24 V/70 W/75 W	**1 987 302 441**

180 mm High/low-beam headlamp H4



H4 External-fitting headlamp with ball-type base, with side-marker lamp.

Headlamp housing
Steel, black-resicoated.
Chrome-plated outer rim.

Electrical connection
Cable entry through rubber grommet.

Lens
Colorless lens.

Headlamp adjustment
Using ball-type base and two adjusting screws.

Mounting
Upright.

Attachment
Using ball-type base with M12 threaded stud, 26 mm long.

H4 External-fitting headlamp	
	0 301 810 102

Accessories and spare parts	
Lens	**1 305 604 026**
Sealing gasket	**1 300 212 013**
Reflector	**1 305 314 929**

Type of bulb		
H4	12 V/55 W/60 W	**1 987 302 041**
H4	24 V/70 W/75 W	**1 987 302 441**
T 4 W	12 V/4 W	**1 987 302 207**
T 4 W	24 V/4 W	**1 987 302 512**

200 x 142 mm H4 High/low-beam headlamp



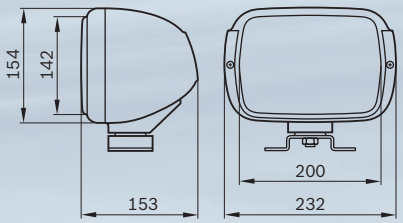

H4 External-fitting headlamp made of black plastic, fracture proof, with side marker lamp.

Headlamp housing
With black plastic outer rim, impact-resistant and fracture proof.

Lens
Colorless, waterproof bonding to reflector.

Headlight unit
Interchangeable, with protective cap.
Cable entry through rubber grommet.

Headlamp adjustment
Using all-direction 5° pivoting bracket.

Mounting
Upright and suspended.

Attachment
Using bracket with two mounting holes Ø 11 mm, hole spacing 90 mm.

H4 External-fitting headlamp		
		0 301 710 100

Accessories and spare parts		
Headlight unit		**0 301 019 101**

Type of bulb		
H4	12 V/55 W/60 W	**1 987 302 041**
H4	24 V/70 W/75 W	**1 987 302 441**
T 4 W	12 V/4 W	**1 987 302 207**
T 4 W	24 V/4 W	**1 987 302 512**

Flush-fitting headlamps

132 x 120 mm R2 High/low-beam headlamp



R2 Flush-fitting headlamp for vehicles up to a maximum of 40 km/h, with side-marker lamp.

Headlamp housing
Steel outer rim, aluminum colored, resicoated.

Lens
Colorless lens, bonded to outer rim. Without protective rubber cap.

R2 Flush-fitting headlamp	
	0 301 203 001

Accessories and spare parts	
Outer rim with lens	**1 305 543 911**
Sealing gasket for housing	**1 301 015 061**
Reflector	**1 305 311 062**

Type of bulb		
R2	12 V/40 W/45 W	**1 987 302 023**
R2	24 V/50 W/55 W	**1 987 302 421**
T 4 W	12 V/4 W	**1 987 302 207**
T 4 W	24 V/4 W	**1 987 302 512**

132 x 120 mm H4/R2 High/low-beam headlamp



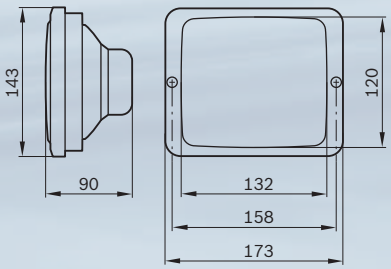

H4/R2 Flush-fitting headlamp

Headlamp housing
Outer rim made of scratch-proof and impact-resistant black plastic.

Lens
Colorless lens, with waterproof bonding to reflector. With protective rubber cap.

Without side-marker lamp.	
For H4 bulb	**0 301 204 100**[1)]

With side-marker lamp.	
For H4 bulb	**0 301 204 101**[1)]
For R2 bulb	**0 301 204 002**

Accessories and spare parts	
Headlight unit for ... 100	**1 305 320 892**
Outer rim	**1 305 540 097**
Housing for installing headlamps in bumper or open areas of body	
Housing	**1 305 231 020**

Type of bulb		
H4	12 V/55 W/60 W	**1 987 302 041**
R2	12 V/40 W/45 W	**1 987 302 023**
R2	24 V/50 W/55 W	**1 987 302 421**
T 4 W	12 V/4 W	**1 987 302 207**
T 4 W	24 V/4 W	**1 987 302 512**

[1)] Not for 24 V bulb.

170 x 100 mm Standard headlamp for commercial vehicles – H4

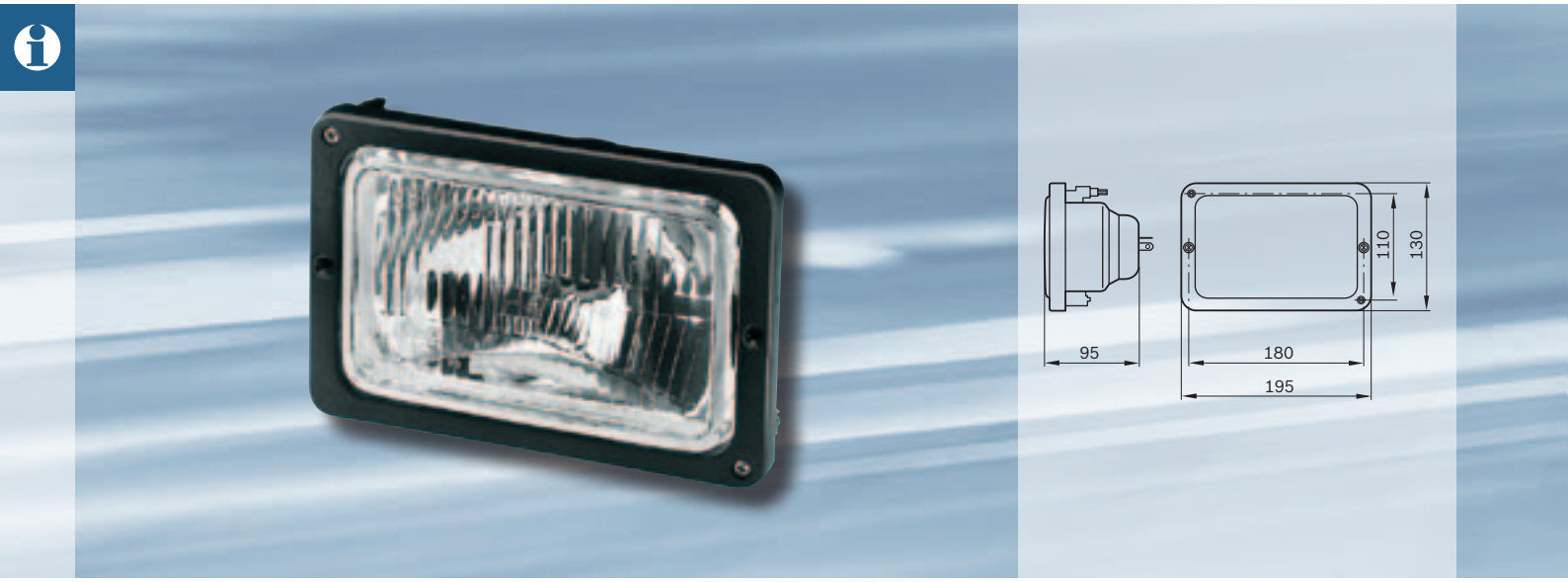

H4/R2 Flush-fitting headlamp

Headlamp housing
Outer rim made of scratch-proof and impact-resistant black plastic.

Lens
Colorless lens, with waterproof bonding to reflector. With protective rubber cap.

H4 Flush-fitting headlamp		
		0 301 711 101

Accessories and spare parts	
Headlight unit	**0 301 709 101**
Outer rim	**1 305 540 097**

Type of bulb		
H4	12 V/55 W/60 W	**1 987 302 041**
H4	24 V/70 W/75 W	**1 987 302 441**
T 4 W	12 V/4 W	**1 987 302 207**
T 4 W	24 V/4 W	**1 987 302 512**

185 x 130 mm Standard headlamp for commercial vehicles – H4



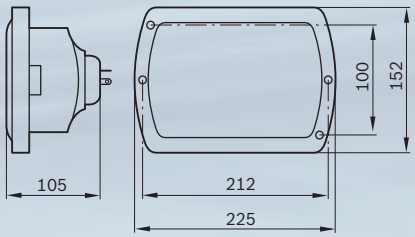

H4 Flush-fitting headlamp with side-marker lamp.

H4 Flush-fitting headlamp		
		0 301 710 111

Headlamp housing
Outer rim made of scratch-proof and impact-resistant black plastic.

Type of bulb		
H4	12 V/55 W/60 W	**1 987 302 041**
H4	24 V/70 W/75 W	**1 987 302 441**
T 4 W	12 V/4 W	**1 987 302 207**
T 4 W	24 V/4 W	**1 987 302 512**

Lens
Colorless lens, with waterproof bonding to reflector. With protective rubber cap.

Headlamp adjustment
From front.

Mounting
Waterproof bonding to reflector.
With protective rubber cap.
With three M5 screws.

273 x 172 mm Standard headlamp for commercial vehicles – H4/R2



Standard truck headlamp with side-marker lamp – suitable for installation of a headlamp washer system.

Installation
In body or bumper.

Headlamp housing
Support frame and housing made of black plastic.

Lens
Colorless lens, attached to support frame from inside with 4 screws and retaining springs.

Headlight unit
Side-marker lamp with blade-terminal connection. Bulb replacement from rear using removable plastic protective cap.

Headlamp adjustment
From front.

Attachment
With four M8 screws.

H4 Flush-fitting headlamp		
Without housing		**0 301 017 118**
With housing		**0 301 017 102**
Convertible to headlight levelling control (hydromechanical manual adjustment)		
		0 301 017 303

Accessories and spare parts	
Lens	**1 305 620 468**
Support frame	**1 305 544 901**
Reflector	**1 305 365 913**

Type of bulb		
H4	12 V/55 W/60 W	**1 987 302 041**
H4	24 V/70 W/75 W	**1 987 302 441**
T 4 W	12 V/4 W	**1 987 302 207**
T 4 W	24 V/4 W	**1 987 302 512**

R2 Flush-fitting headlamp	
With housing	**0 301 017 003**

Accessories and spare parts	
Lens	**1 305 620 467**
Support frame	**1 305 544 901**
Reflector	**1 305 365 912**

Type of bulb		
R2	12 V/40 W/45 W	**1 987 302 023**
R2	24 V/50 W/55 W	**1 987 302 421**
T 4 W	12 V/4 W	**1 987 302 207**
T 4 W	24 V/4 W	**1 987 302 512**

395 x 203 mm H4 High/low-beam headlamp



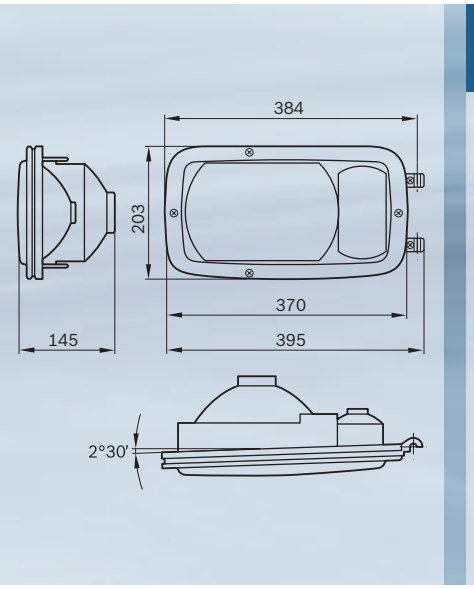

H4 Combined headlamp unit with integrated turn-signal lamp and side-marker lamp.

Installation
In bumper.

Headlight unit
Plastic support frame.

Lens
Colorless lens, for main lamp and turn-signal lamp combined.

Electrical connection
Silver-plated blade-terminal connections.

Bulb replacement
From front by swinging out the light unit. Headlamp adjustment from front.

Attachment
Using two side hinges and two screws.

Applications
In Mercedes-Benz commercial vehicles.

H4 Combined headlamp unit	
Installation on left	**0 301 057 100**
Installation on right	**0 301 057 101**

Accessories and spare parts	
Lens for installation on left	**1 305 620 904**
Lens for installation on right	**1 305 620 905**
Reflector	**1 305 320 920**

Type of bulb		
H4	12 V/55 W/60 W	**1 987 302 041**
H4	24 V/70 W/75 W	**1 987 302 441**
P 21 W	12 V/21 W	**1 987 302 215**
P 21 W	24 V/21 W	**1 987 302 524**
T 4 W	12 V/4 W	**1 987 302 207**
T 4 W	24 V/4 W	**1 987 302 512**

420 x 214 mm H4 High/low-beam headlamp

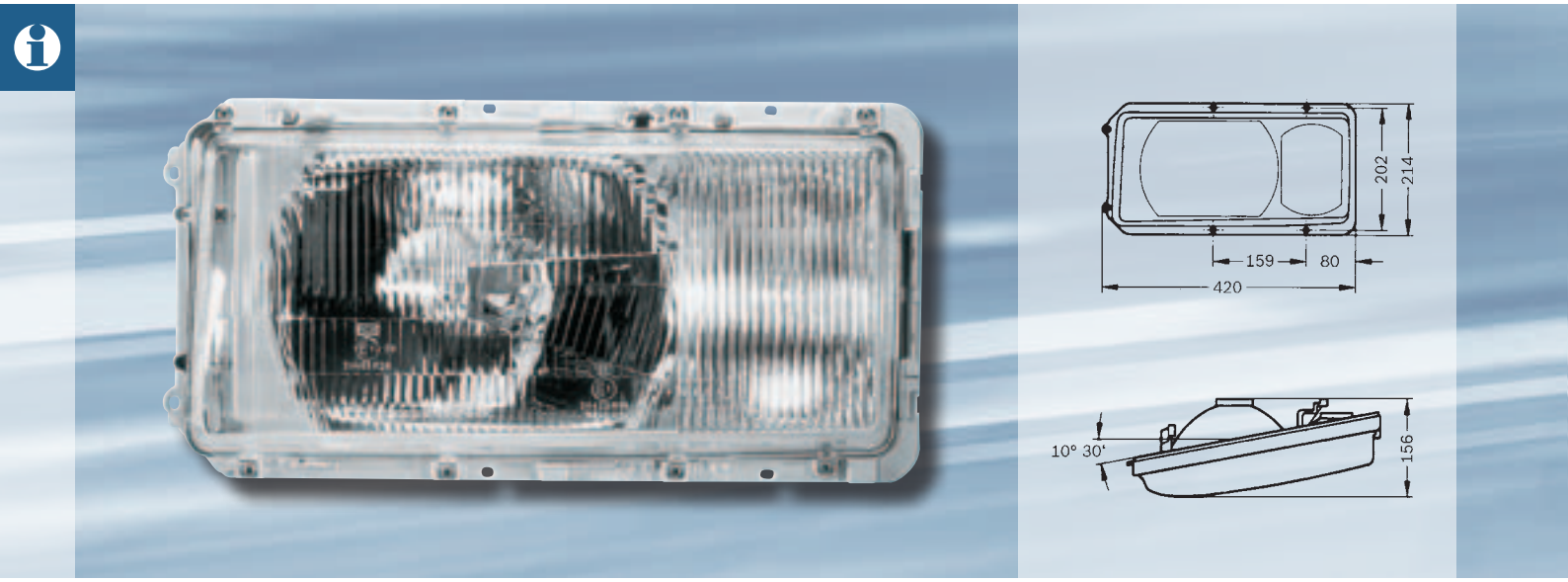

H4 Combined headlamp unit with integrated fog lamp and side-marker lamp.

Installation
In vehicle body.

Headlight unit
Die-cast aluminum support frame.

Lens
Colorless lens, for headlamp and fog lamp combined.

Electrical connection
Side-marker lamp and fog lamp with pin-terminal connection.

Headlamp adjustment
From front.

Attachment
Using 6 screws.

H4 Combined headlamp unit	
Installation on left	**0 301 058 105**
Installation on right	**0 301 058 106**

Accessories and spare parts	
Lens for installation on left	**1 305 620 934**
Lens for installation on right	**1 305 620 935**
Reflector for high/low beam.	
Installation on left	**1 305 320 836**
Installation on right	**1 305 320 837**
Reflector for fog lamp	
Installation on left	**1 305 320 832**
Installation on right	**1 305 320 833**

Type of bulb		
H4	12 V/55 W/60 W	**1 987 302 041**
H4	24 V/70 W/75 W	**1 987 302 441**
P 21 W	12 V/21 W	**1 987 302 215**
P 21 W	24 V/21 W	**1 987 302 524**
T 4 W	12 V/4 W	**1 987 302 207**
T 4 W	24 V/4 W	**1 987 302 512**

170 mm H4/R2 High/low-beam headlamp



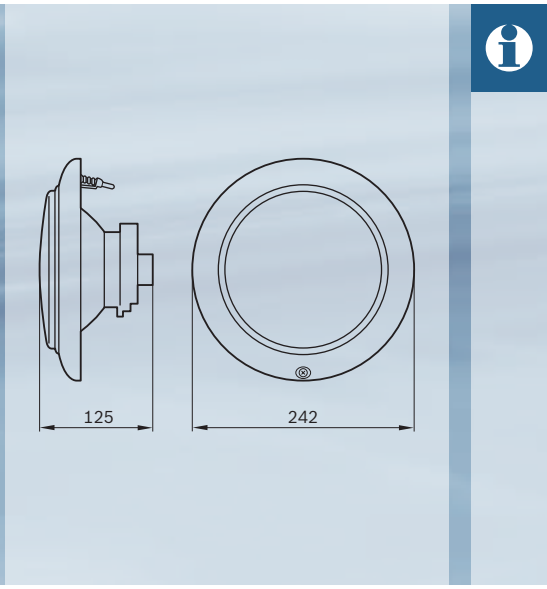

H4/R2 High/low-beam headlamp

Installation
In body or bumper. Chrome-plated outer rim.

Headlight unit
With pressure-compensating element to prevent misting of lens and reflector. Reliably prevents penetration of dust and water.

Lens
Colorless reinforced glass lens, with waterproof bonding to reflector. Attached to support frame with 3 screws.

Headlamp adjustment
From front.

Attachment
By inserting the support frame at the top, and with one M5 screw at the bottom.

H4/R2 High/low-beam headlamp	
For H4 bulb	**0 301 611 101**
For R2 bulb	**0 301 611 002**

Accessories and spare parts	
Headlight unit for H4 bulb	**1 305 333 023**
Headlight unit for R2 bulb	**1 305 333 026**
Outer rim	**1 305 504 115**

Type of bulb		
H4	12 V/55 W/60 W	**1 987 302 041**
H4	24 V/70 W/75 W	**1 987 302 441**
R2	12 V/40 W/45 W	**1 987 302 023**
R2	24 V/50 W/55 W	**1 987 302 421**
T 4 W	12 V/4 W	**1 987 302 207**
T 4 W	24 V/4 W	**1 987 302 512**

285 x 154 mm H4 High/low-beam headlamp



H4 High/low-beam headlamp

Installation
In body or bumper. Die-cast zinc support frame.

Lens
Colorless lens, attached to support frame from outside with 4 screws and retaining springs.

Headlamp adjustment
From front.

Attachment
With four screws (holes in support frame Ø 6.5 mm).

H4 High/low-beam headlamp	
Installation on left	**0 301 007 101**
Installation on right	**0 301 007 102**

Accessories and spare parts	
Lens	**1 305 615 004**
Outer rim	**1 305 515 900**
Reflector	**1 305 320 842**

Type of bulb		
H4	12 V/55 W/60 W	**1 987 302 041**
H4	24 V/70 W/75 W	**1 987 302 441**
T 4 W	12 V/4 W	**1 987 302 207**
T 4 W	24 V/4 W	**1 987 302 512**

Single-function lamps

Single-function lamps for commercial vehicles – for universal application, 196 x 85 mm



These lamps can be combined as required in a horizontal or vertical configuration.

Typical arrangements
The examples shown represent the most common arrangements.

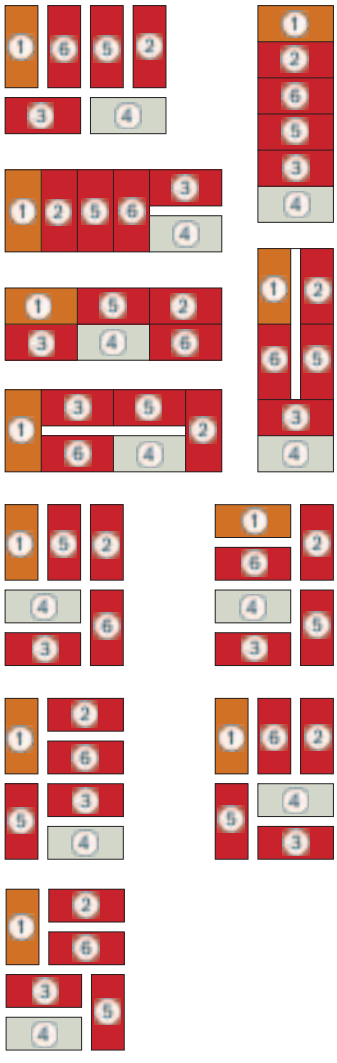

① Turn-signal lamp
② Stop lamp
③ Fog warning lamp
④ Backup lamp
⑤ Reflector (not currently available)
⑥ Tail lamp

Stop lamp for commercial vehicles – for universal application, 196 x 85 mm



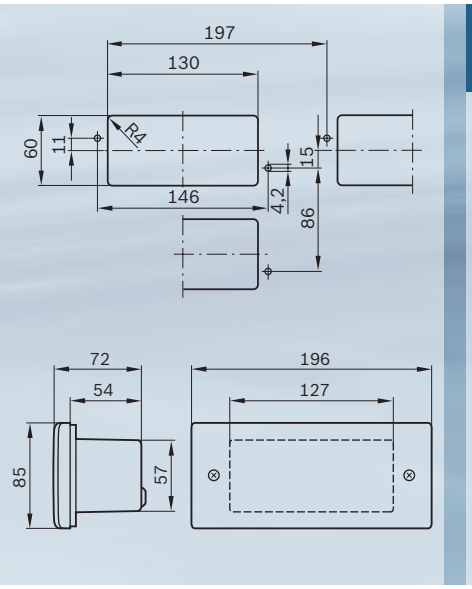

Lamp function
Stop lamp

Lens
Red

Lamp housing
Glass-fiber-reinforced transparent polyamide. Bulb holder mounted in housing with vibration damping and full insulation.

Electrical connection
Two-pole (separate ground connection), blade-terminal connections.

Installation
- ▸ Vertical, horizontal
- ▸ In vehicle body
- ▸ Installation opening 130 x 60 mm
- ▸ Installation depth 60 mm

Attachment
With 2 screws, hole Ø 4.2 mm, hole spacing 146 mm.

Version		
ECE approval		
Power 2 x 21 W		**0 312 201 002**
SAE approval		
Power 2 x 21 W		**0 312 201 003**

Type of bulb		
P 21 W	12 V/21 W	**1 987 302 607**
P 21 W	24 V/21 W	**1 987 302 501**

Turn-signal lamp for commercial vehicles – for universal application, 196 x 85 mm

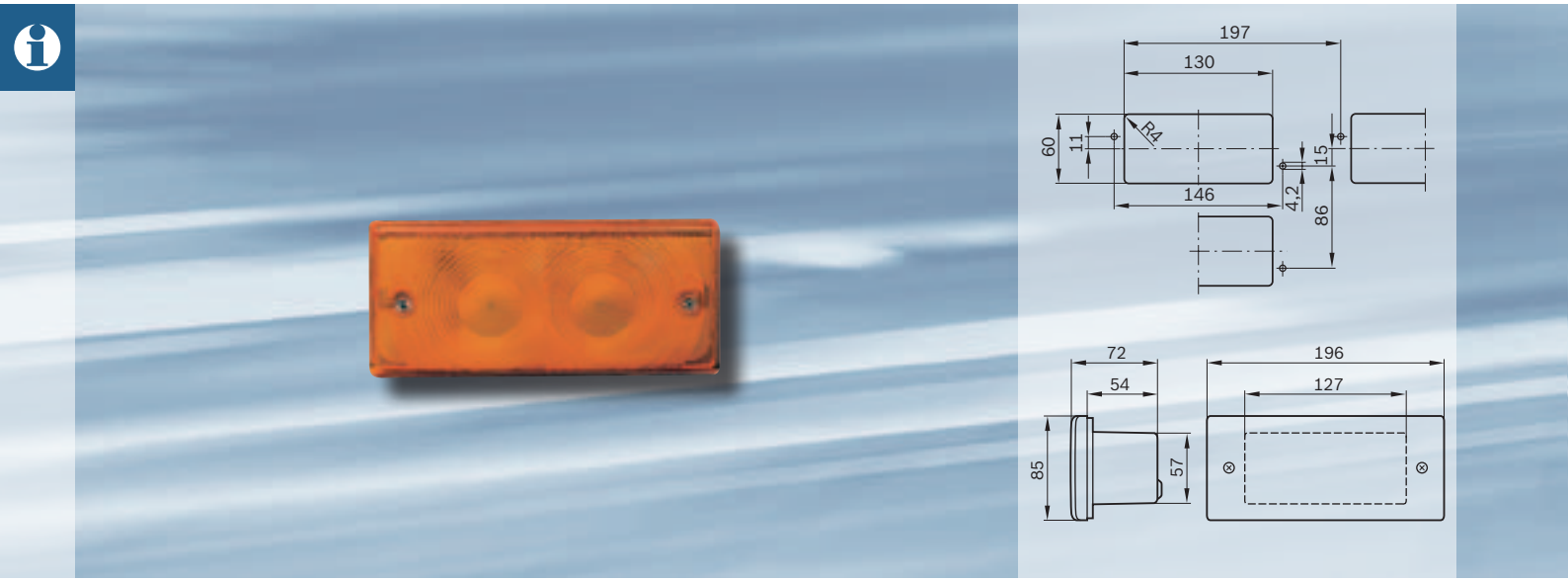

Lamp function
Turn signal

Lens
Yellow

Lamp housing
Glass-fiber-reinforced colorless polyamide. Bulb holder mounted in housing with vibration damping and full insulation.

Electrical connection
Two-pole (separate ground connection), blade-terminal connections.

Installation
- ▸ Vertical, horizontal
- ▸ In vehicle body
- ▸ Installation opening 130 x 60 mm
- ▸ Installation depth 60 mm

Attachment
With 2 screws, hole Ø 4.2 mm, hole spacing 146 mm.

Version	
ECE approval	
Power 1 x 21 W	**0 311 316 003**[1)]
Power 2 x 21 W	**0 311 316 004**[2)]
SAE approval	
Power 1 x 21 W	**0 311 316 009**
Power 2 x 21 W	**0 311 316 005**

Type of bulb		
P 21 W	12 V/21 W	**1 987 302 607**
P 21 W	24 V/21 W	**1 987 302 501**

[1)] Front installation
[2)] Rear installation

Tail lamp for commercial vehicles – for universal application, 196 x 85 mm



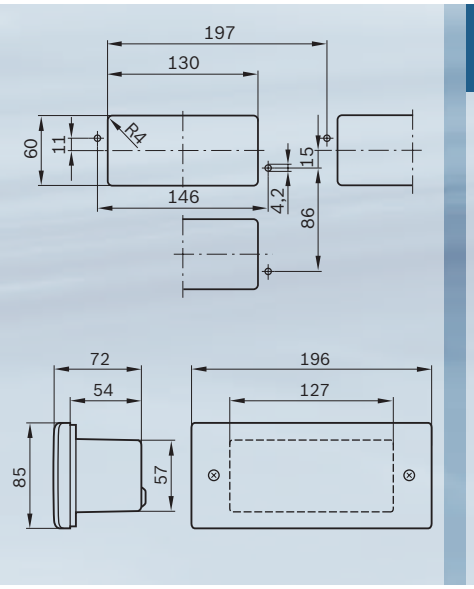

Lamp function
Tail lamp

Lens
Red

Lamp housing
Glass-fiber-reinforced colorless polyamide. Bulb holder mounted in housing with vibration damping and full insulation.

Electrical connection
Two-pole (separate ground connection), blade-terminal connections.

Installation
- ▸ Vertical, horizontal
- ▸ In vehicle body
- ▸ Installation opening 130 x 60 mm
- ▸ Installation depth 60 mm

Attachment
With 2 screws, hole Ø 4.2 mm, hole spacing 146 mm.

Version		
ECE approval		
Power 2 x 5 W		**0 313 050 005**
SAE approval		
Power 2 x 5 W		**0 313 050 006**

Type of bulb		
R 5 W	12 V/5 W	**1 987 302 237**
R 5 W	24 V/5 W	**1 987 302 527**

Side-marker lamp for commercial vehicles – for universal application, 196 x 85 mm

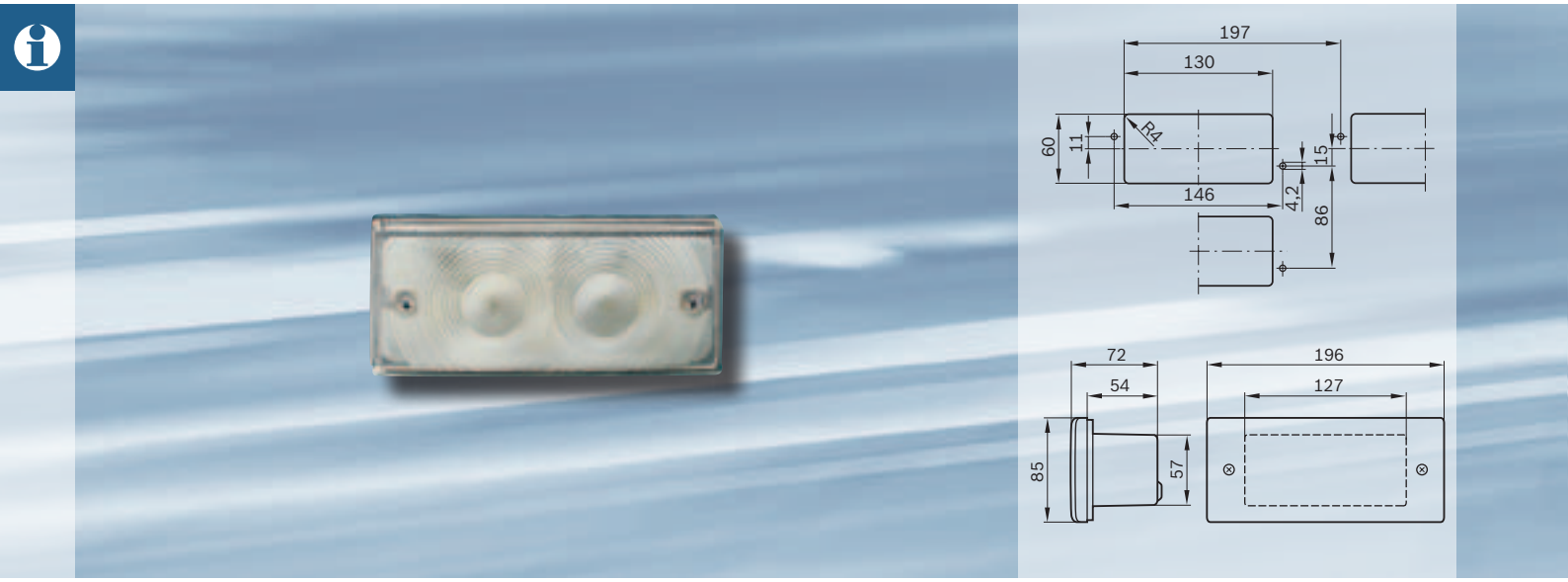

Lamp function
Side-marker lamp

Lens
Colorless

Lamp housing
Glass-fiber-reinforced colorless polyamide. Bulb holder mounted in housing with vibration damping and full insulation.

Electrical connection
Two-pole (separate ground connection), blade-terminal connections.

Installation
- ▸ Vertical, horizontal
- ▸ In vehicle body
- ▸ Installation opening 130 x 60 mm
- ▸ Installation depth 60 mm

Attachment
With 2 screws, hole Ø 4.2 mm, hole spacing 146 mm.

Version		
ECE approval		
Power 2 x 5 W		**0 315 104 027**[1)2)]

Type of bulb		
R 5 W	12 V/5 W	**1 987 302 237**
R 5 W	24 V/5 W	**1 987 302 527**

[1)] Can also be used as step or roof lamp.
[2)] Not to be fitted on new vehicles.

Fog warning lamp for commercial vehicles – for universal application, 196 x 85 mm



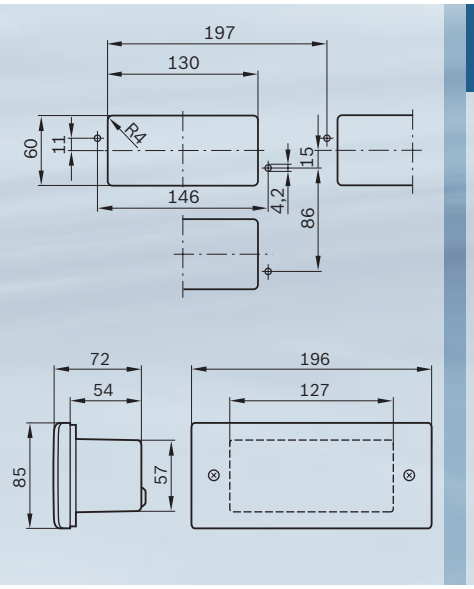

Lamp function
Fog warning lamp

Lens
Red

Lamp housing
Glass-fiber-reinforced colorless polyamide. Bulb holder mounted in housing with vibration damping and full insulation.

Electrical connection
Two-pole (separate ground connection), blade-terminal connections.

Installation
- ▸ Horizontal
- ▸ In vehicle body
- ▸ Installation opening 130 x 60 mm
- ▸ Installation depth 60 mm

Attachment
With 2 screws, hole Ø 4.2 mm, hole spacing 146 mm.

Version		
ECE approval		
Power 1 x 21 W		**0 313 110 002**

Type of bulb		
P 21 W	12 V/21 W	**1 987 302 607**
P 21 W	24 V/21 W	**1 987 302 501**

Backup lamp for commercial vehicles – for universal aplication, 196 x 85 mm

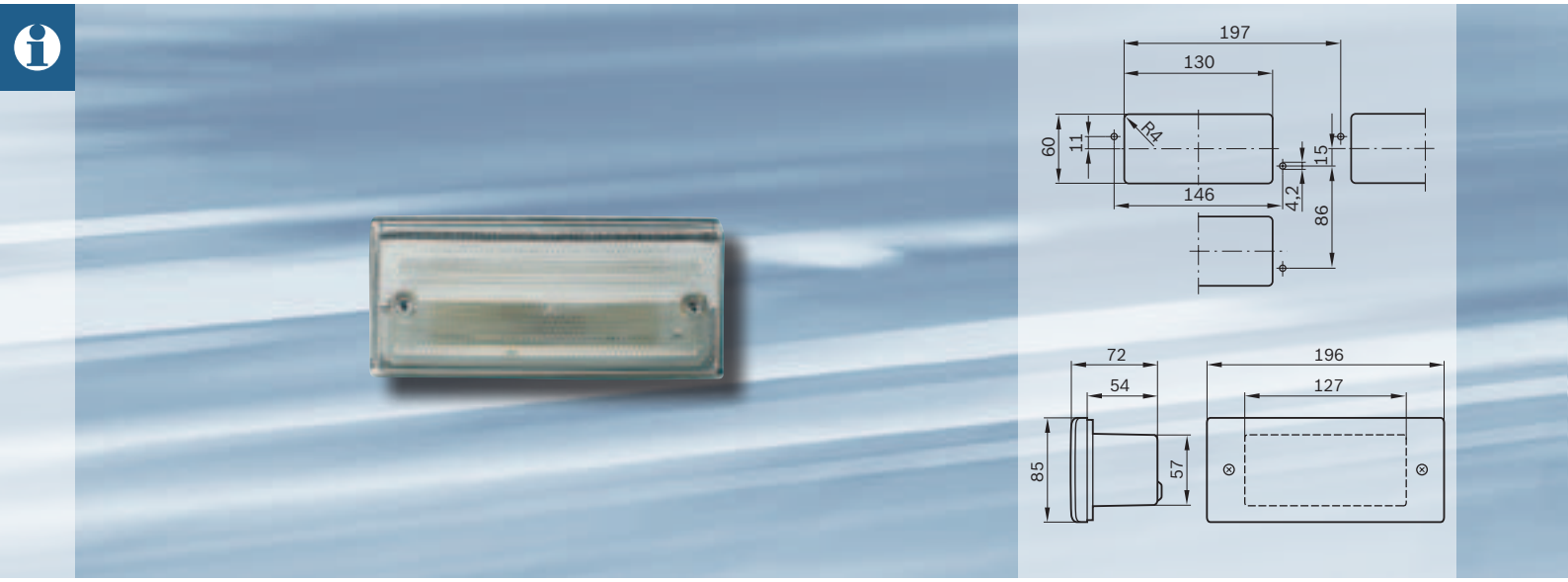

Lamp function
Backup lamp

Lens
Colorless

Lamp housing
Glass-fiber-reinforced colorless polyamide. Bulb holder mounted in housing with vibration damping and full insulation.

Electrical connection
Two-pole (separate ground connection), blade-terminal connections.

Installation
- ▸ Horizontal
- ▸ In vehicle body
- ▸ Installation opening 130 x 60 mm
- ▸ Installation depth 60 mm

Attachment
With 2 screws, hole Ø 4.2 mm, hole spacing 146 mm.

Version		
ECE approval		
Power 1 x 21 W		**0 314 107 002**
Power 2 x 21 W		**0 314 107 003**
SAE approval		
Power 2 x 21 W		**0 314 107 004**

Type of bulb		
P 21 W	12 V/21 W	**1 987 302 607**
P 21 W	24 V/21 W	**1 987 302 501**

Side-marker lamp, 100 x 54 mm

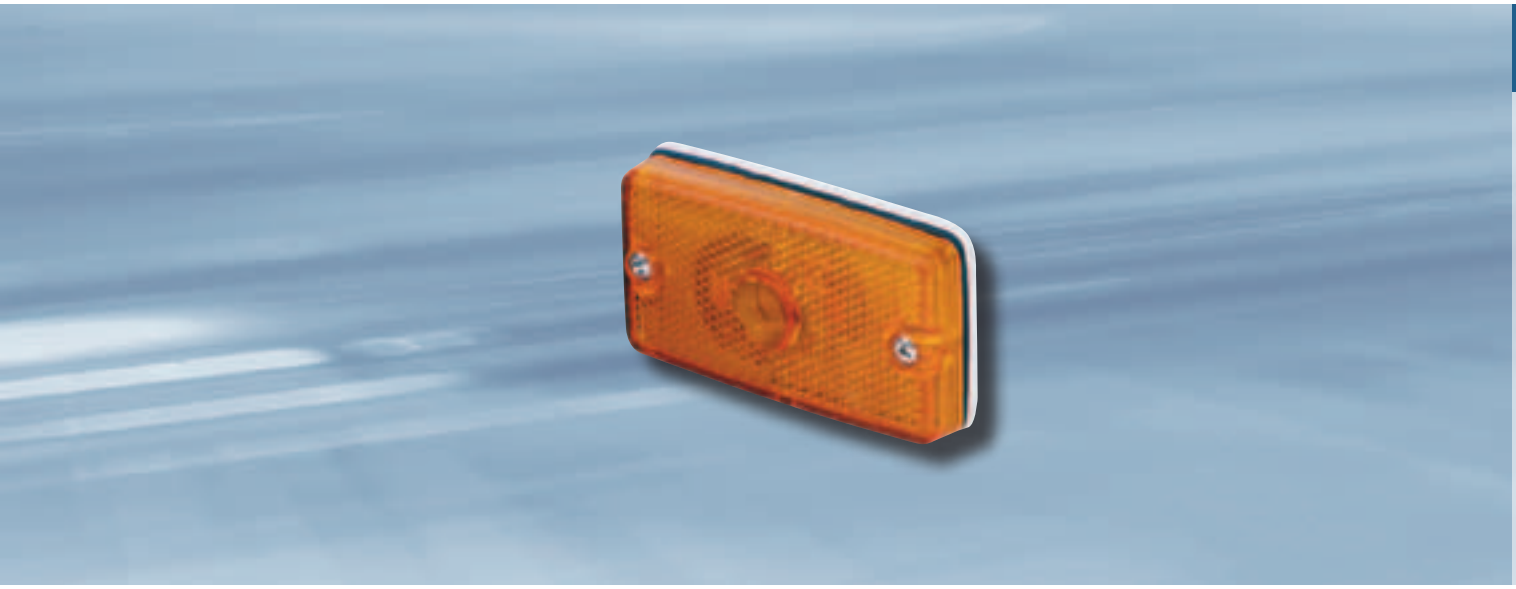

Side-marker lamp, 100 x 54 mm, E-type-tested

Lamp function
Side-marker lamp

Lens
Yellow

Lamp housing
Plastic with sealing gasket.

Installation opening
60 x 35 mm

Mounting
Horizontal.

Attachment
With 2 self-tapping screws (supplied), hole spacing 80 mm.

Electrical connection
Two pole, blade-terminal connections.

Side-marker lamp		
Yellow		**0 315 104 006**[1)]

Type of bulb		
C 5 W	12 V/5 W	**1 987 302 211**
C 5 W	24 V/5 W	**1 987 302 507**

[1)] Available while stocks last.

Fog warning lamp / backup lamp, 90 x 75 mm

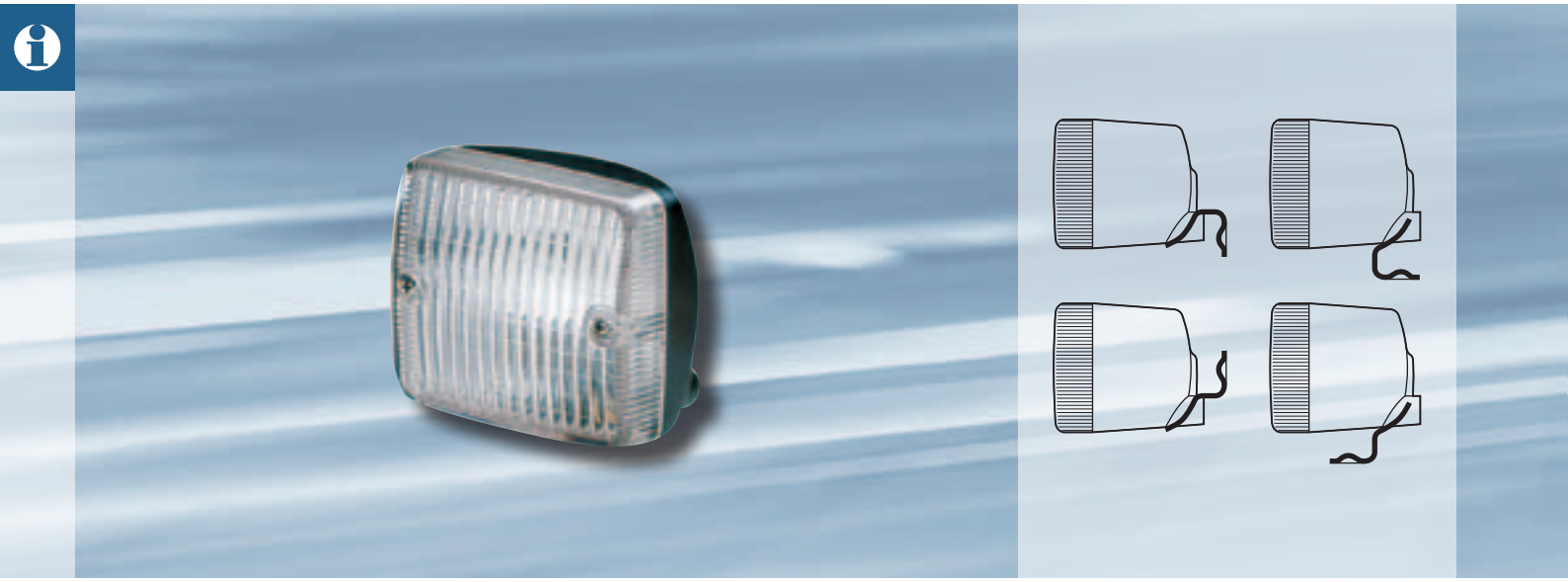

Plastic lamp, with matt-black plastic lamp housing, E-type-tested, 90 x 75 mm.

Mounting
Upright and suspended. Mounting examples: See illustration.

Attachment
With adjustable universal bracket.

Electrical connection
Single-pole, blade terminal, cable entry through rubber grommet.

Scope of delivery
1 lamp, universal bracket and installation instructions (no bulb).

Fog warning lamp		
Red		**0 313 108 001**

Backup lamp		
Colorless		**0 314 105 001**

Type of bulb		
P 21 W	12 V/21 W	**1 987 302 201**
P 21 W	24 V/21 W	**1 987 302 501**

Fog warning lamp / backup lamp, 140 x 65 mm



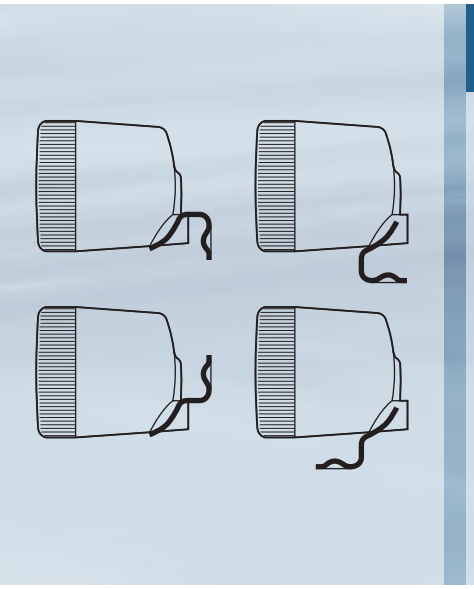

Plastic lamp, with matt-black plastic lamp housing, E-type-tested, 140 x 65 mm.

Mounting
Vertical and suspended. Mounting examples: See illustration.

Attachment
With adjustable universal bracket.

Electrical connection
Single-pole, blade terminal, cable entry through rubber grommet.

Scope of delivery
1 lamp, universal bracket and installation instructions (no bulb).

Fog warning lamp		
Red		**0 313 109 001**

Backup lamp		
Colorless		**0 314 106 001**

Accessories and spare parts		
Lens, red		**1 305 620 243**

Type of bulb		
P 21 W	12 V/21 W	**1 987 302 201**
P 21 W	24 V/21 W	**1 987 302 501**

Fog warning lamp / backup lamp, 140 x 65 mm



Plastic lamp with chrome-plated lamp housing, E-type-tested, for mounting on bumper, 140 x 65 mm.

Mounting
Upright and suspended.

Attachment
With pivoting bracket, with M10 threaded stud.

Electrical connection
Single-pole, blade terminal, cable entry through rubber grommet.

Scope of delivery
1 lamp, assembly parts and installation instructions (no bulb).

Fog warning lamp		
Red		**0 313 103 006**

Backup lamp		
Colorless		**0 307 400 001**

Type of bulb		
P 21 W	12 V/21 W	**1 987 302 201**
P 21 W	24 V/21 W	**1 987 302 501**

Fog warning lamp / backup lamp, 170 x 85 mm



Plastic lamp, with matt-black plastic lamp housing, E-type-tested, for mounting on bumper, 170 x 85 mm.

Mounting
Upright and suspended.

Attachment
Pivoting, corrosion-resistant bracket with M10 threaded stud.

Headlight unit
Lens with waterproof seal to reflector.

Electrical connection
Two-pole (separate ground connection), blade-terminal connections, cable entry through splash-proof special hinged grommet.

Scope of delivery
1 lamp, assembly parts and installation instructions (no bulb).

Fog warning lamp		
Red		**0 313 106 003**

Backup lamp		
Colorless		**0 314 102 003**

Accessories and spare parts		
Grommet		**1 300 312 010**

Type of bulb		
P 21 W	12 V/21 W	**1 987 302 201**
P 21 W	24 V/21 W	**1 987 302 501**

Fog warning lamp / backup lamp, 140 mm



Plastic lamp, with matt-black plastic lamp housing, E-type-tested, for mounting on bumper, Ø 140 mm.

Mounting
Upright and suspended.

Attachment
Pivoting, corrosion-resistant bracket with M10 threaded stud.

Headlight unit
Lens with waterproof seal to reflector.

Electrical connection
Two-pole (separate ground connection), blade-terminal connections, cable entry through splash-proof special hinged grommet.

Scope of delivery
1 lamp, assembly parts and installation instructions (no bulb).

Fog warning lamp		
Red		**0 313 107 002**

Backup lamp		
Colorless		**0 314 104 002**

Accessories and spare parts		
Rubber grommet		**1 300 312 010**

Type of bulb		
P 21 W	12 V/21 W	**1 987 302 201**
P 21 W	24 V/21 W	**1 987 302 501**

Side-marker lamp



Side-marker lamp in matt-black plastic, E-type-tested.

Mounting
Horizontal.

Scope of delivery
Sealing plate and screws included.

Side-marker lamp		
Left mounting		**0 315 109 003**
Right mounting		**0 315 109 004**

Type of bulb		
R 5 W	12 V/5 W	**1 987 302 204**
R 5 W	24 V/5 W	**1 987 302 510**

More light, better visibility, added safety – Automotive bulbs from Bosch



Bosch quality for added road safety
Bosch automotive bulbs meet the most stringent quality standards, because when it comes to repairs we believe a properly functioning lighting system is a top priority – using the famous Bosch quality.
As well as our customers' requirements, we are guided by statutory regulations. In terms of service life, Bosch automotive bulbs far surpass legal requirements.

Bosch automotive bulbs stand for reliability and durability. They enhance road safety and improve driving comfort by providing excellent road illumination without dazzling oncoming traffic.

ECE guidelines
The ECE (Economic Commission for Europe) guidelines ensure added safety on public roads. All replaceable automotive bulbs for the vehicle exterior must be approved in accordance with these guidelines. As well as headlamps, this applies to signal lamps, for instance turn-signal lamps, stop lamps, tail lamps, fog warning lamps, side-marker lamps, backup lamps as well as license-plate lighting. The standards are defined in ECE Directive R 37 for automotive bulbs. Xenon HID automotive bulbs are subject to ECE Directive R 99. The aims of this standardization are to enable replacement across manufacturers on the one hand, while at the same time ruling out confusion with other bulb types.

UV-Cut
For technical and design reasons, the outer lenses on modern vehicles' headlamps are made of plastic. The UV radiation from a bulb causes plastics to gradually turn yellow and become brittle over time. Therefore, all Bosch main headlamps are equipped with UV-Cut, which reduces the harmful UV components of the light.

Symbols for enhanced safety
You will find various symbols on our packaging, providing information on handling automotive bulbs.

 Do not touch the glass with your fingers. Hold the bulb by the base.	 Protect against splash water.
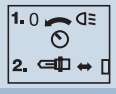 Turn off the headlamps on the vehicle before replacing a bulb.	 Do not use bulbs with scratched or damaged glass.
 Wear appropriate eye protection when installing and removing.	 Designated usage of the bulb: The bulb is for use on vehicles (6 V, 12 V).
 Wear appropriate protective gloves when installing and removing.	 Designated usage of the bulb: The bulb is for use on vehicles (24 V).
 Attention: Hot!	 The bulb is not suitable for domestic room lighting.
 Only to be used in lamps with a protective cover.	 Only to be installed by specialist personnel!

Sustainability

Safety and transparency for the consumer
To increase safety for the consumer, we provide product instructions on our bulb packaging or package inserts. This meets the requirements of the EU directives.
To ensure that the information is understood internationally, pictograms are used.

Environmental and resource conservation
Ecological globalization demands sparing use of resources on all continents and avoiding burdens on the environment. For us, this means: Ecological thinking calls for technical action.

Materials
The EC directive 2002/95/EC limiting the use of defined hazardous substances in electrical and electronic equipment, governs the use of hazardous substances in equipment and components. As you would expect, we comply with this directive; in fact, we exceed the requirements it sets out.

Packaging
Bosch uses only packaging which is environmentally compatible and easy to dispose of. We supply our workshop bulbs in recyclable single-material, solid cardboard packaging. For blister packaging we use environmentally compatible, easy-to-separate dual-material packaging.
Quality and environmental awareness – always a matter of course for Bosch.

Basic lighting-technology terms

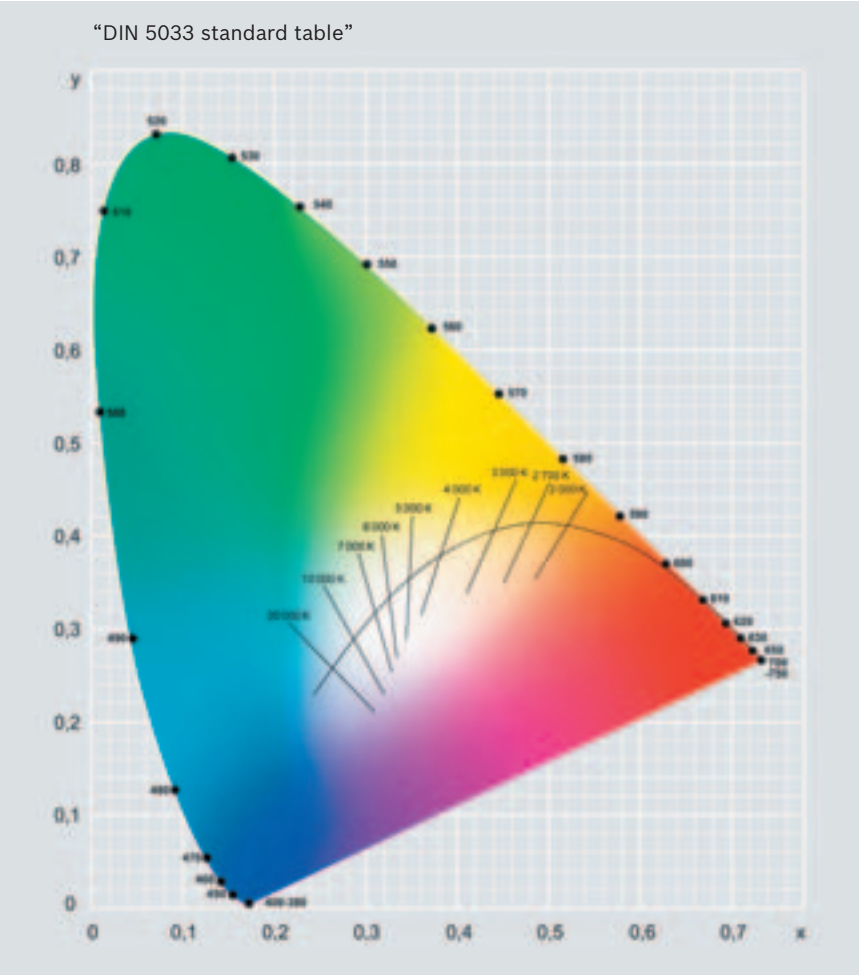

Below, we outline some of the basic principles of lighting technology, the "tool" used to create light.

Light
Light is propagated in the form of an electromagnetic wave. The human eye can only recognize a limited range (wavelength 380 to 780 nm) of these waves as light beams. The wavelength of the radiation determines the color of the light, from violet (380 nm) to red (780 nm) with the intermediate colors blue, green, yellow and orange, as can be seen in a rainbow.

Luminous flux
Luminous flux is the term used for the total radiant power emitted by the light source in the wavelength range of visible light, irrespective of the emission direction.
Unit: Lumen [lm].

Illumination
The illumination is the amount of light that is beamed in a particular spatial direction. It is made up of the ratio of the luminous-flux component and the associated solid-angle component.
Unit: Candela [cd].

Luminance
The luminance of a light source or an illuminated surface is a measure of the "apparent brightness". It is the luminous flux relative to a particular surface area. The human eye perceives differences in luminance as differences in brightness. The brightness of a candle is approximately 1 cd (Candela). Automotive bulbs are in the magnitude of 10 cd for tail lamps, 100 cd for stop lamps, 200 cd for fog warning lamps and more than 200,000 cd for headlamps.
Unit: Candela per square meter [cd/m^2].

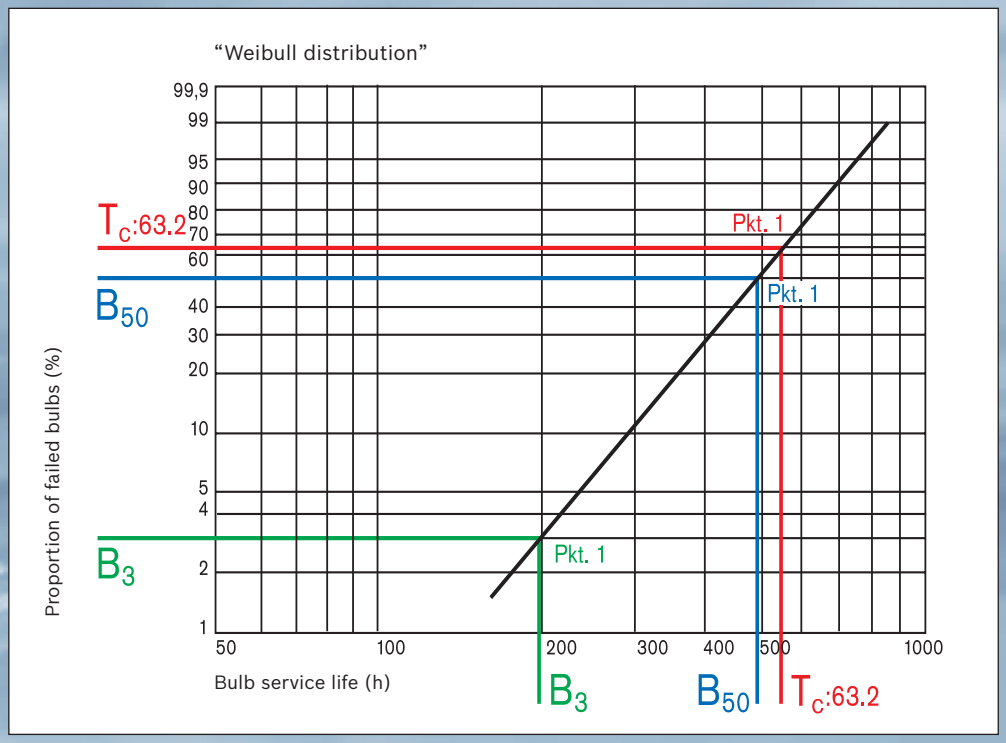

Luminous efficiency
Lumionous efficiency is a measure of the efficiency of the process of converting electrical energy into light energy. The luminous efficiency of a halogen bulb is approx. 22–30 lm/W (efficiency below 10%), while that of a gas-discharge bulb is approx. 90 lm/W.
Unit: Lumens per watt [lm/W].

Color temperature
The color temperature specifies the shade of a light source (see Fig. DIN 5033 standard color table). The reference object used is a black solid, which glows in different light colors as heating increases. The emitted light changes from red to yellow and white through to blue. For example, a bulb with warm white light has a color temperature of approx. 2,700 Kelvin, a gas-discharge bulb with light similar to daylight approx. 4,000 Kelvin.
Unit: Kelvin [K].

Service life
The Weibull distribution has become established as the standard for analyzing the service life of technical products. This shows the failure rate in % over the entire service life of the bulb.

B_3 value: Represents the early-failure rate of bulbs. 3% of all bulbs tested had failed at this burning time.

T_c value: Represents the characteristic failure rate of 63.2% of bulbs.

B_{50} value: Reflects the mean service life of the bulbs. The failure rate is 50%.

The Bosch automotive bulbs range

The right vehicle lamp for every application!

- A wide variety: Suitable for more than 95% of all vehicles in Europe.
- Workshop and self-service ranges: Two tailor-made product groups to achieve optimum sales results through all distribution channels
- Wide choice of product lines concentrating on different areas: The right bulb for every application.
- Bulb range for 6 V / 12 V / 24 V electrical system voltage

Xenon



Xenon
High luminous efficiency, better visibility, lower energy consumption and longer service life – all possible thanks to the modern technology in gas-discharge bulbs.

Halogen 12 V

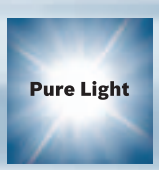

Pure Light
The standard complete range in OEM quality with all standard bulbs for headlamps and other lamps (12 V and 6 V versions).



Longlife Daytime
Up to 3 times longer service life and up to 10% more light*. Also ideal as daytime driving-light thanks to long-life technology.



Magic Effect
Thanks to the special coating, the Magic Effect turn-signal bulb is practically colorless when switched off. It only turns orange when switched on. This bulb is ideal for clear-lens headlamps, and in comparison to standard turn-signal bulbs features twice the service life





Plus 30
Up to 30% more light*. For added safety and better road illumination.



Plus 50/Plus 60
Up to 60% more light on the road* and up to 20 m longer range. For increased safety on the road.



Plus 50 Plus Life/Plus 60 Plus Life
Up to 60% more light on the road* and up to 20 m longer range. Plus an extended service life.



Plus 90
The halogen bulb with the highest light intensity: Up to 90% greater illumination of the road* with white light color. For maximum safety, easy, relaxed and less tiring vision even on long journeys and in any weather.



Xenon Blue
Blue/white light color, full-strength cool light over entire service life. Xenon look for halogen headlamps.



Xenon Silver
White light similar to daylight, plus up to 50% more light on the road*. See and be seen more clearly and over a longer distance. For halogen headlamps.



Rallye
Special high-performance bulbs for halogen headlamps. These bulbs are not approved for use on public roads. Only for use on roads not subject to road-traffic regulations.

Halogen 24 V



Trucklight
Complete 24 V range for commercial vehicles. Trucklight +100 (more light and longer service life*) and Heavy Duty (exceptionally durable for particularly tough conditions) version also available.

* Compared to standard halogen bulbs

Workshop packaging



New Bosch workshop packaging offers you a range of benefits

- Boxed packaging, practical and stackable
- All important information clearly visible at a glance
- Pack of 1 for headlamp bulbs and pack of 10 for auxiliary lamp bulbs

The complete workshop packaging range

- 6 V bulbs for older vehicles and special applications
- 12 V bulbs for all current vehicle types. Impressive product range: Pure Light, Plus 50 / Plus 60, Plus 30, Xenon Blue, Longlife Daytime, Rallye
- 24 V bulbs for tough applications in commercial vehicles: Trucklight, Trucklight +100, Trucklight Heavy Duty
- Gas-discharge lamps

“Informative” order-number system

All Bosch workshop bulbs start with the same seven digits: 1 987 302 xxx.

Number of bulbs you order using the part number

Each part number corresponds to 1 workshop pack.

- Workshop pack with 1 bulb: Part number corresponds to 1 workshop pack with 1 bulb
- Workshop pack with 10 bulbs: Part number corresponds to 1 bulb (1 workshop pack contains 10 bulbs)

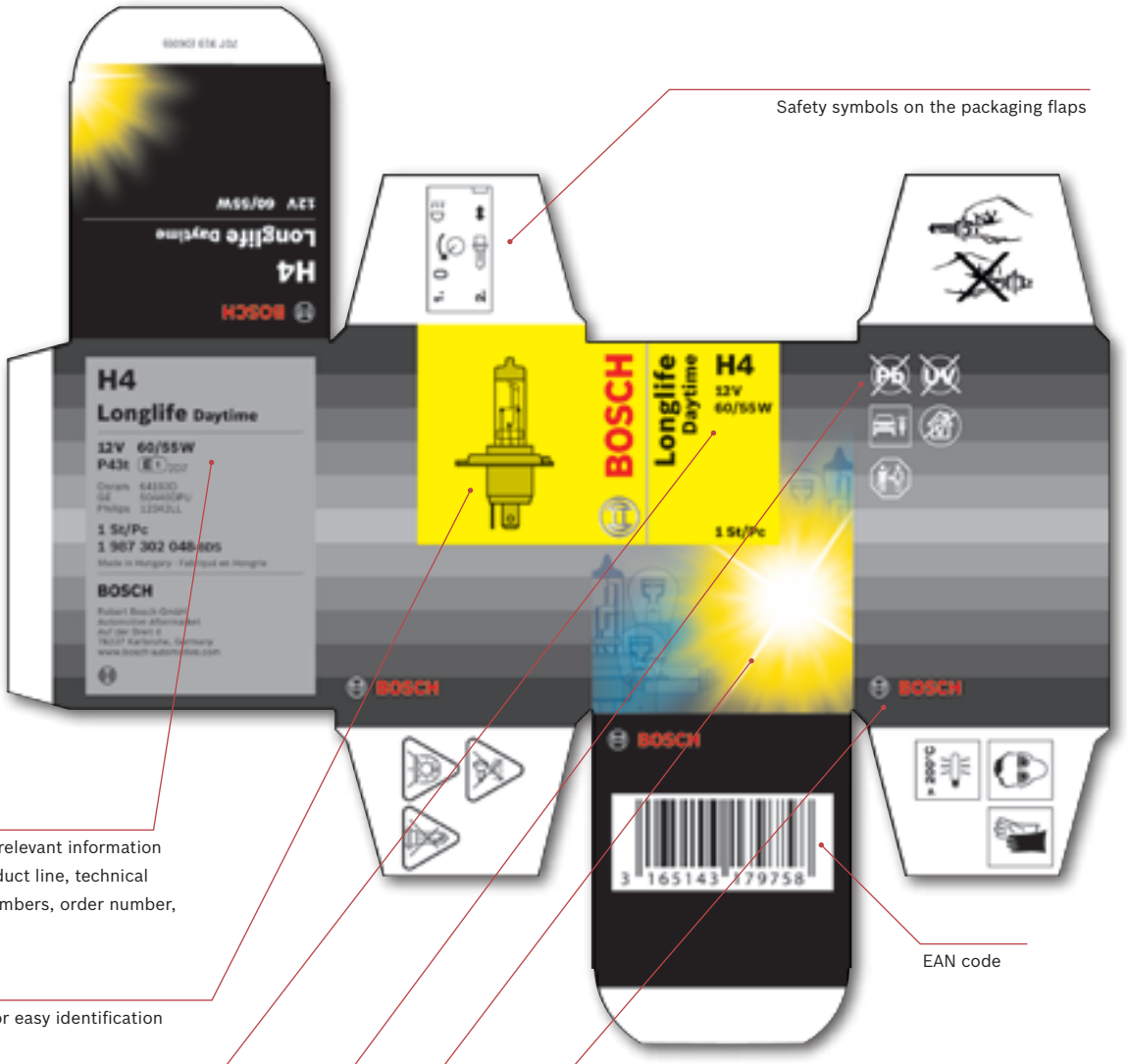

Safety symbols on the packaging flaps

Clear representation of all relevant information at a glance: Bulb type, product line, technical information, competitor numbers, order number, etc.

Drawing of the bulb type for easy identification

Name of the product line and the key technical data is clearly positioned on the front in the yellow box and on the top flap

Additional information on installation, applications and material properties

Color-coding system on front and flap for quick and easy orientation

Emphasis of the Bosch brand on all sides of the packaging – the brand for optimum quality, competence and innovation

EAN code

Blister packaging



New star concept
The new star concept highlights the special features of every bulb at first glance. The service life, range and brightness ratings give an immediate indication of which bulb is best suited to which applications.

High-turnover bulbs focused on the end customer in the self-service range
- 12 V bulbs for all current vehicle types
- Product range that is aimed at end customers: Pure Light, Longlife Daytime, Xenon Silver, Xenon Blue, Plus 90, Plus 50 Plus Life / Plus 60 Plus Life, Plus 50 / Plus 60, Plus 30, Magic Effect

New Bosch blister packs: Attractive and impressive
- High-quality, appealing packaging
- Effective orientation at POS thanks to color-coding system and star concept (see below)
- High-quality material
- Dynamic, expressive motif
- Bulb is visible under firm plastic cover
- All important information clearly visible at a glance and easy to read
- Product description in 8 languages
- Environmentally compatible, easy-to-separate two-material packaging
- Technical specification as customer search number (low risk of incorrect purchases)

"Informative" order number system
All Bosch self-service bulbs start with the same seven digits: 1 987 301 xxx.

Number of bulbs you order using the part number
Each part number corresponds to 1 blister pack.
- Blister pack with 1 bulb: Part number corresponds to 1 blister pack with 1 bulb
- Blister pack with 2 bulbs: Part number corresponds to 1 blister pack with 2 bulbs

Star concept

	Pure Light	Longlife Daytime	Xenon Silver	Xenon Blue	Plus 90	Plus 50 / 60 Plus Life	Plus 50 / 60	Plus 30	Magic Effect
Service life	● ● ●	● ● ● ● ●	● ● ●	● ● ●	● ● ●	● ● ● ●	● ● ●	● ● ●	● ● ● ●
Range	● ● ●	● ● ●	● ● ● ● ●	● ● ●	● ● ● ● ● ●	● ● ● ● ●	● ● ● ● ●	● ● ● ●	● ● ●
Brightness	● ● ●	● ● ●	● ● ● ● ● ●	● ● ● ● ●	● ● ● ● ●	● ● ● ●	● ● ● ●	● ● ●	● ● ● ● ●

Emphasis of the Bosch brand, standing for optimum quality, innovation and competence

Product-line name is clearly shown in the yellow box

Firm plastic cover for optimum protection and visibility of the bulb

Dynamic, expressive motif

Emphasis of product features and rating using star concept → Easy orientation at POS, added benefits



Color-coding system for easy orientation at POS

Key technical data: Bulb type, voltage, Watts

Euro hole for easy display on any shelf size

Key technical data: Bulb type, voltage, watts

Product-line name

Explanation/translation of symbols on front

Explanation of bulb characteristics and added value in 8 languages

Graphical representation of the application/installation location of the bulb



GTÜ quality symbol (independent German testing institute)

Order number

Separate area containing all other information: Safety symbols, homologation number, EAN code

Special packaging

Box of two:
Practical and attention-grabbing
Some bulbs, particularly bulbs from newer product lines, are available in the Bosch box of two, as bulbs should always be replaced as a pair.



Advantages
- High-quality, appealing packaging
- Effective orientation at POS thanks to color-coding system and star concept (see picture on page A 10)
- High-quality material
- Dynamic, expressive motif
- Bulbs are visible thanks to transparent plastic-film window
- All important information clearly visible at a glance and easy to read
- Product description in 8 languages
- Environmentally compatible, easy-to-separate two-material packaging
- Technical specification as customer search number (low risk of incorrect purchases)
- The boxes of two are available for the Plus 90 bulb range together with a counter display to make them even more noticeable at the POS
- The boxes of two are suitable for standing or hanging, making them equally interesting for workshops and large-scale retail displays

Automotive bulb kits: Everything you need
With a choice of the small and handy Minibox, or the Maxibox containing almost all types of replacement car bulbs, drivers can always feel safe. Whenever a bulb fails, it can be replaced right away. In some countries, carrying a replacement set of bulbs is a legal requirement.

"Informative" order-number system
All Bosch boxes of two, Miniboxes and Maxiboxes start with the same seven digits: 1 987 301 xxx.

Number of bulbs you order using the part number
Each part number corresponds to 1 pack.
- Box of two: Part number corresponds to 1 box of two with 2 bulbs
- Minibox and Maxibox: Part number corresponds to 1 box with all the bulbs it contains



Color-coding system for easy orientation at POS

Key technical data at first glance

Euro hole for easy display on any shelf size

Emphasis of the Bosch brand, standing for optimum quality, innovation and competence

Product-line name is clearly shown in the yellow box

Transparent plastic-film window

Dynamic, expressive motif

Emphasis of product features and rating using star concept → Easy orientation at POS, added benefits



Key technical data and product line

Explanation/translation of symbols on front

GTÜ quality symbol (independent German testing institute)

Explanation of bulb characteristics and added value in 8 languages

Order number

All additional information: Safety symbols, homologation number, etc.

The EAN code can be found on the bottom of the pack



Gas-discharge lamps

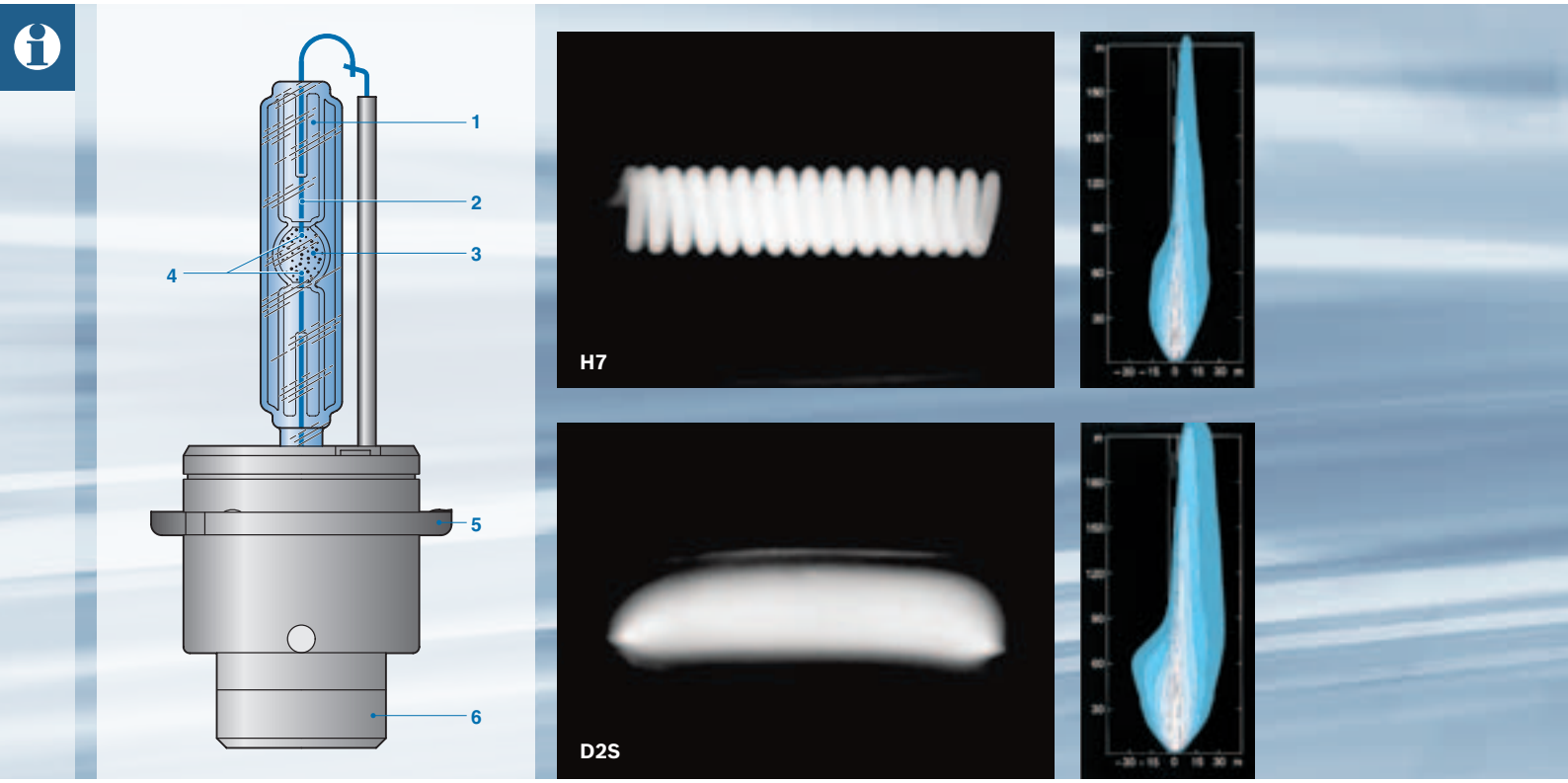

Gas-discharge lamps generate light using an arc
The glass bulb is filled with the noble gas Xenon and a mixture of metal halides.
The very high voltage causes the gas to ionize between the electrodes and it begins to glow. Complete ionization of the particles normally takes several seconds.
To achieve the full brightness immediately when starting, an electric ballast unit supplies an increased “starting current” to accelerate the particle ionization. Once the full light output is reached, the bulb current is restricted.

Better visibility
Gas-discharge lamps generate 2.5x more light than conventional bulbs. Because of this increased light emission, they also illuminate those parts of the road that cannot be lit by halogen bulbs.
The light is so bright that it is comparable to genuine daylight. This means that the driver can see road markings and signs much earlier, while the Xenon light is very comfortable for the eyes.

Reduced energy consumption
Thanks to their lower energy consumption (35 W instead of 55 W), less fuel is required than for conventional bulbs. This benefits the environment and is something you will notice at the gas station.

Longer service life
The state-of-the-art technology employed in gas-discharge lamps results in a service life several times longer than that of conventional bulbs. The latter can also fail because of problems at their weak point – the glow filament, which can also be damaged by severe vibrations or shocks.
The modern operating principle of gas-discharge lamps needs no glow filament, a fact which increases their durability and reliability.

1 UV inert-gas bulb
2 Electrical penetration
3 Discharge chamber
4 Electrodes
5 Lamp base
6 Electrical lead-through

D2S = Gas-discharge lamp (arc)
H7 = Halogen lamp (filament)

Xenon

Gas-discharge bulbs generate light as bright as daylight using an arc

- Extremely good visibility due to high light yield
- Lower energy consumption than with conventional bulbs, benefits both the environment and your pocket
- Long service life – often the entire service life of a vehicle



		ECE	$\frac{U}{V}$	$\frac{P}{W}$	
Xenon					
1 987 302 905	–	D1S	–	35 W	PK32d-2
1 987 302 903	–	D2R	–	35 W	P32d-3
1 987 302 904	–	D2S	–	35 W	P32d-2

Pure Light

Standard automotive bulbs in OEM quality

- 12 V bulbs for all current headlamps and lights
- Full range for all lighting in and around the vehicle
- 6 V bulbs for older vehicles and special applications



		ECE	U / V	P / W	
Pure Light					
1 987 302 011	**1 987 301 005**	H1	12 V	55 W	P14,5s
1 987 302 021	**1 987 301 021**	R2 Halogen	12 V	45/40 W	P45t
1 987 302 022	–	H2	12 V	55 W	X511
1 987 302 023	**1 987 301 020**	R2	12 V	45/40 W	P45t
1 987 302 031	**1 987 301 006**	H3	12 V	55 W	PK22s
1 987 302 041	**1 987 301 001**	H4	12 V	60/55 W	P43t
1 987 302 047	–	H4	12 V	60/55 W	P43t
1 987 302 071	**1 987 301 012**	H7	12 V	55 W	PX26d
1 987 302 081	–	H8	12 V	35 W	PGJ19-1
1 987 302 082	–	H9	12 V	65 W	PGJ19-5
1 987 302 083	–	H10	12 V	42 W	PY20d
1 987 302 084	–	H11	12 V	55 W	PGJ19-2
1 987 302 152	**1 987 301 062**	HB3	12 V	60 W	P20d
1 987 302 153	**1 987 301 063**	HB4	12 V	51 W	P22d
1 987 302 201	**1 987 301 017**	P21W	12 V	21 W	BA15s
1 987 302 202	**1 987 301 016**	P21/5W	12 V	21/5 W	BAY15d
1 987 302 203	**1 987 301 019**	R10W	12 V	10 W	BA15s
1 987 302 204	**1 987 301 022**	R5W	12 V	5 W	BA15s
1 987 302 205	–	W16W	12 V	16 W	W2,1x9,5d
1 987 302 206	**1 987 301 026**	W5W	12 V	5 W	W2,1x9,5d
1 987 302 207	**1 987 301 023**	T4W	12 V	4 W	BA9s
1 987 302 208	**1 987 301 024**	–	12 V	1,2 W	W2x4,6d
1 987 302 210	**1 987 301 014**	–	12 V	10 W	SV8,5-8
1 987 302 211	**1 987 301 004**	C5W	12 V	5 W	SV8,5-8
1 987 302 212	–	–	12 V	2 W	BA9s
1 987 302 213	**1 987 301 018**	PY21W	12 V	21 W	BAU15s
1 987 302 214	–	–	12 V	18 W	BA15s
1 987 302 215	**1 987 301 015**	P21/4W	12 V	21/4 W	BAZ15d
1 987 302 217	**1 987 301 028**	W3W	12 V	3 W	W2,1x9,5d
1 987 302 218	–	–	12 V	2 W	W2x4,6d
1 987 302 219	–	–	12 V	1,2 W	B8,5d
1 987 302 220	–	–	12 V	1,2 W	B8,3d
1 987 302 221	–	–	12 V	2 W	B8,5d

		ECE	U V	P W	
Pure Light					
1 987 302 223	–	–	12 V	2 W	W2,1x9,5d
1 987 302 224	–	–	12 V	2 W	BA7s
1 987 302 225	–	–	12 V	5 W	SV8,5-8
1 987 302 226	–	–	12 V	3 W	SV7-8
1 987 302 227	–	–	12 V	10 W	SV8,5-8
1 987 302 228	–	–	12 V	10 W	SV8 5-8
1 987 302 229	–	–	12 V	18 W	SV8,5-8
1 987 302 230	–	C21W	12 V	21 W	SV8,5-8
1 987 302 231	–	–	12 V	5 W	BA9s
1 987 302 232	**1 987 301 035**	H6W	12 V	6 W	BAX9s
1 987 302 233	–	–	12 V	10 W	BA9s
1 987 302 235	–	–	12 V	1,2 W	BX8,4d
1 987 302 236	–	–	12 V	2 W	BX8,4d
1 987 302 237	–	R5W	12 V	5 W	BA15d
1 987 302 238	–	–	12 V	15 W	SV8,5-8
1 987 302 240	–	W2,3W	12 V	2,3 W	W2x4,6d
1 987 302 241	–	WY5W	12 V	5 W	W2,1x9,5d
1 987 302 243	–	–	12 V	1,1 W	BX8,4d
1 987 302 244	–	–	12 V	2 W	B8,3d
1 987 302 245	–	–	12 V	20 W	BA9s
1 987 302 248	–	–	12 V	3 W	BA9s
1 987 302 251	–	W21W	12 V	21 W	W3x16d
1 987 302 252	–	W21/5W	12 V	21/5 W	W3x16q
1 987 302 254	–	–	12 V	1,3 W	BX8,4d
1 987 302 255	–	–	12 V	1,5 W	BX8,4d
1 987 302 256	–	–	12 V	1,5 W	B8,5d
1 987 302 601	–	–	6 V	0,6 W	E10
1 987 302 602	–	–	6 V	2,4 W	EP10
1 987 302 603	–	T4W	6 V	4 W	BA9s
1 987 302 604	–	R10W	6 V	10 W	BA15s
1 987 302 605	–	R5W	6 V	5 W	BA15s
1 987 302 606	–	S3	6 V	15 W	P26s
1 987 302 607	–	P21W	6 V	21 W	BA15s
1 987 302 609	–	P21/5W	6 V	21/5 W	BAY15d
1 987 302 612	–	–	6 V	10 W	SV8,5-8
1 987 302 613	–	–	6 V	2 W	BA9s
1 987 302 614	–	R2	6 V	45/40 W	P45t
Magic Effect					
	1 987 301 025	PY21W	12 V	21 W	BAU15s

Magic Effect

Only lights up orange when turned on

- Magic Effect: Thanks to a special coating, the Magic Effect turn-signal lamp appears almost colorless when off and only turns orange when it is switched on. Ideal for clear-glass headlamps.
- It also has twice the service life of standard turn-signal bulbs.



Plus 30 and Plus 50/60

Better visibility thanks to up to 30 % / 50 % / 60 % more light*

- Improved illumination and orientation
- Increased safety
- Significant gains in driving safety and enjoyment
- Hazards, obstructions and road markings can be seen more quickly



		ECE	U V	P W	
Plus 30					
1 987 302 012	**1 987 301 003**	H1	12 V	55 W	P14,5s
1 987 302 042	**1 987 301 002**	H4	12 V	60/55 W	P43t
Plus 50/60					
1 987 302 019	**1 987 301 041**	H1	12 V	55 W	P14,5s
1 987 302 049	**1 987 301 040**	H4	12 V	60/55 W	P43t
1 987 302 079	**1 987 301 042**	H7	12 V	55 W	PX26d

* Compared to standard halogen bulbs

Plus 50 Plus Life / Plus 60 Plus Life

Extra lighting power* and extra service life

- Improved illumination and orientation
- Considerably better reflection of road signs and improved visibility for night driving thanks to up 50% (H1, H7) and to 60% (H4) more light*
- Hazards, obstructions and road markings are seen sooner
- High proportion of Xenon gas gives a longer service life and longer replacement intervals



		ECE	U V	P W	
Plus 50/60 Plus Life in the blister pack					
	1 987 301 064	H1	12 V	55 W	P14,5s
	1 987 301 065	H4	12 V	60/55 W	P43t
	1 987 301 066	H7	12 V	55 W	PX26d
Plus 50/60 Plus Life in box of two					
1 987 301 071 **		H1	12 V	55 W	P14,5s
1 987 301 070 **		H4	12 V	60/55 W	P43t
1 987 301 072 **		H7	12 V	55 W	PX26d

* Compared to standard halogen bulbs

** Box of two – Suitable for workshop and self-service packaging

Plus 90

Power bulbs for outstanding lighting

- Up to 90 % greater illumination of the road* for maximum driving safety
- Intense white light* for easy, relaxed and less tiring vision even on long journeys
- Better visibility whatever the weather, particularly at night
- Longer light beam provides a greater range of vision, giving you more time to react
- Exclusive design featuring silver top (H4 and H7) and blue sectors



		ECE	U V	P W	
Plus 90 in the blister pack					
	1 987 301 076	H1	12 V	55 W	P14,5s
	1 987 301 077	H4	12 V	60/55 W	P43t
	1 987 301 078	H7	12 V	55 W	PX26d
Plus 90 in box of two					
1 987 301 073 **		H1	12 V	55 W	P14,5s
1 987 301 074 **		H4	12 V	60/55 W	P43t
1 987 301 075 **		H7	12 V	55 W	PX26d



* Compared to standard halogen bulbs

** Box of two – Suitable for workshop and self-service packaging

Longlife Daytime

The bulb with stamina

- Up to three times the service life*
- Up to 10% more light* (H1, H3, H4, H7)
- Ideal for high-mileage drivers
- Ideal for drivers who drive with lights during the day

Note: The daytime driving-light regulations differ greatly among European countries. Please ensure that you observe the applicable legal regulations.



		ECE	U V	P W	
Longlife Daytime					
1 987 302 281	**1 987 301 060**	C5W	12 V	5 W	SV8,5-8
1 987 302 018	**1 987 301 051**	H1	12 V	55 W	P14,5s
1 987 302 038	**1 987 301 053**	H3	12 V	55 W	PK22s
1 987 302 048	**1 987 301 054**	H4	12 V	60/55 W	P43t
	1 987 301 061	H6W	12 V	6 W	BAX9s
1 987 302 078	**1 987 301 057**	H7	12 V	55 W	PX26d
1 987 302 282	**1 987 301 055**	P21/5W	12 V	21/5 W	BAY15d
1 987 302 280	**1 987 301 050**	P21W	12 V	21 W	BA15s
1 987 302 283	**1 987 301 059**	R10W	12 V	10 W	BA15s
1 987 302 284	**1 987 301 058**	R5W	12 V	5 W	BA15s
1 987 302 287	**1 987 301 056**	T4W	12 V	4 W	BA9s
1 987 302 286	**1 987 301 052**	W5W	12 V	5 W	W2,1x9,5d

* Compared to standard halogen bulbs

Xenon Blue

Blue/white light color, full-strength cool light over entire service life

- Stylish appearance
- Powerful bluish-white light similar to xenon light, for halogen headlamps
- Better reflection of road signs and markings, obstructions (pedestrians, cyclists, animals, etc.) are seen sooner and more clearly
- More comfortable for the eyes than light from conventional halogen headlamps



		ECE	U V	P W	
Xenon Blue					
1 987 302 015	**1 987 301 011**	H1	12 V	55 W	P14,5s
1 987 302 035	**1 987 301 007**	H3	12 V	55 W	PK22s
1 987 302 045	**1 987 301 010**	H4	12 V	60/55 W	P43t
1 987 302 075	**1 987 301 013**	H7	12 V	55 W	PX26d
1 987 302 154		HB3	12 V	60 W	P20d
1 987 302 155		HB4	12 V	51 W	P22d
	1 987 301 034	T4W	12 V	4 W	BA9s
	1 987 301 033	W5W	12 V	5 W	W2,1x9,5d

Xenon Silver

Ahead of its time with extremely white halogen light

Added light and brightness:
- ▸ White light, similar to daylight
- ▸ Up to 50% greater illumination of the road*
- ▸ Premium Design



		ECE	U / V	P / W	
Xenon Silver in the blister pack					
	1 987 301 067	H1	12 V	55 W	P14,5s
	1 987 301 068	H4	12 V	60/55 W	P43t
	1 987 301 069	H7	12 V	55 W	PX26d
Xenon Silver in box of two					
1 987 301 080 **		H1	12 V	55 W	P14,5s
1 987 301 081 **		H4	12 V	60/55 W	P43t
1 987 301 087 **		H7	12 V	55 W	PX26d

* Compared to standard halogen bulbs

** Box of two – Suitable for workshop and self-service packaging

Rallye

Bulbs without ECE approval for off-road use

- Exceptionally light output for extremely tough applications, e.g. in agriculture and forestry, off-road competitions and racing, etc.
- Only for use where road-traffic regulations do not apply, use on public roads is not permitted



		ECE	$\frac{U}{V}$	$\frac{P}{W}$	
Rallye					
1 987 302 016	–	–	12 V	100 W	P14,5s
1 987 302 036	–	–	12 V	100 W	PK22s
1 987 302 046	–	–	12 V	100/80 W	P43t

Trucklight

Comprehensive range of 24 V bulbs for commercial vehicles

Three product lines cover all possible requirements and applications:

- Trucklight: Maximum quality and reliability – conforming to OEM standards
- Trucklight +100: For more light, better visibility, improved economy, more relaxed driving thanks to significantly larger light cone*, shorter out-of-service times and lower costs due to longer replacement intervals (up to 100 % longer service life*)
- Trucklight Heavy Duty: Exceptional resistance to vibration and shock make it ideal for the demanding conditions in commercial vehicles



Trucklight

	ECE	U V	P W	
1 987 302 411	H1	24 V	70 W	P14,5s
1 987 302 421	R2	24 V	55/50 W	P45t
1 987 302 422	H2	24 V	70 W	X511
1 987 302 431	H3	24 V	70 W	PK22s
1 987 302 441	H4	24 V	75/70 W	P43t
1 987 302 471	H7	24 V	70 W	PX26d
1 987 302 501	P21W	24 V	21 W	BA15s
1 987 302 504	–	24 V	1,2 W	W2x4,6d
1 987 302 505	R10W	24 V	10 W	BA15s
1 987 302 507	C5W	24 V	5 W	SV8,5-8
1 987 302 508	–	24 V	2 W	BA9s
1 987 302 510	R5W	24 V	5 W	BA15s
1 987 302 527	R5W	24 V	5 W	BA15d
1 987 302 512	T4W	24 V	4 W	BA9s
1 987 302 514	–	24 V	1,2 W	B8,5d
1 987 302 515	–	24 V	1,2 W	B8,3d
1 987 302 516	–	24 V	2 W	W2,1x9,5d
1 987 302 517	W3W	24 V	3 W	W2,1x9,5d
1 987 302 518	W5W	24 V	5 W	W2,1x9,5d
1 987 302 519	–	24 V	3 W	BA7s
1 987 302 520	–	24 V	5 W	SV8,5-8
1 987 302 521	–	24 V	10 W	SV8,5-8
1 987 302 523	–	24 V	18 W	BA15s
1 987 302 524	P21/5W	24 V	21/5 W	BAY15d
1 987 302 526	–	24 V	15 W	BA15s
1 987 302 528	–	24 V	3 W	SV7-8

Trucklight Heavy Duty

	ECE	U V	P W	
1 987 302 442	H4	24 V	75/70 W	P43t
1 987 302 502	PY21W	24 V	21 W	BAU15s
1 987 302 503	P21W	24 V	21 W	BA15s
1 987 302 506	R10W	24 V	10 W	BA15s
1 987 302 511	R5W	24 V	5 W	BA15s
1 987 302 525	T4W	24 V	4 W	BA9s

Trucklight +100

1 987 302 711	H1	24 V	70 W	P14,5s
1 987 302 731	H3	24 V	70 W	PK22s
1 987 302 741	H4	24 V	75/70 W	P43t
1 987 302 771	H7	24 V	70 W	PX26d
1 987 302 784	H11	24 V	70 W	PGJ19-2

* Compared to Trucklight halogen bulbs

Automotive bulb kits *

Minibox – small and handy, ideal for the glove compartment

Size (H x W x D) 112 x 63 x 52 mm
Includes bulbs for
- Headlamp
- Side-marker lamp
- Tail lamp
- Stop lamp / turn-signal lamp
- 3 fuses

Maxibox – emergency spares for almost all automotive bulbs

Size (H x W x D) 113 x 90 x 53 mm
Includes bulbs for
- Headlamp
- Side-marker lamp
- Tail lamp
- Stop lamp / turn-signal lamp
- Backup lamp
- Fog warning lamp
- License-plate lamp
- 4 fuses



Minibox contents
- H1, H4 or H7
- P21W, R5W, T4W
- 3 fuses

H1 H4 H7



Maxibox contents
- H1, H4, H7 or H1 and H7
- P21W, PY21W, R5W, T4W, P21/5W, W5W, C5W
- 4 fuses (2 x 10 A, 1 x 15 A, 1 x 20 A)

H1 H4 H7

		ECE	U / V	
Automotive bulb kits (Minibox)				
	1 987 301 102	H1, ...	12 V	
	1 987 301 101	H4, ...	12 V	
	1 987 301 103	H7, ...	12 V	
Automotive bulb kits (Maxibox)				
	1 987 301 112	H1, ...	12 V	
	1 987 301 111	H4, ...	12 V	
	1 987 301 113	H7, ...	12 V	
	1 987 301 120	H1/H7, ...	12 V	

* Must be carried as a legal requirement in many European countries: Replacement bulbs – in the practical Bosch box set, along with standard replacement fuses.

Special offers *



Attractive product presentation
To support your sales, we can offer you special offers on request. Here are some examples:

Counter display for boxes of two
Additional sales arguments to increase your turnover using attractive counter displays.
- ▸ Direct at the POS, where they will be seen by your customers
- ▸ Space-saving and attention-grabbing
- ▸ For 12 boxes of two

Size (H x W x D): 295 x 295 x 225 mm



Bulb sales cabinet
For clearly laid out storage and presentation of workshop bulbs, we offer a cabinet with transparent doors. The lower sections of the doors contain information about the installation locations of the different bulbs.
Size (H x W x D): 600 x 520 x 180 mm



Maxibox with free gift
To support special offers, we can offer something special such as the Maxibox 12 V with mini LED light key ring.

* Available on request.
Please contact your sales organization for details.

de **Scheinwerfer-lampen**

en **Headlamp bulbs**

fr **Lampes pour projecteurs**

it **Lampadine per fari principali**

es **Lámparas para faros**

D1

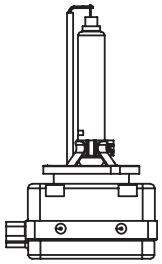

Fig.	ECE		U V	P W			
D1S	Xenon	–	35 W	PK32d-2	**1 987 302 905**	

D2

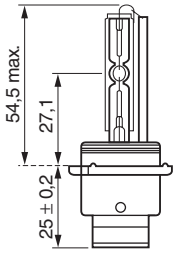

D2R	Xenon	–	35 W*	P32d-3	**1 987 302 903**	
D2S	Xenon	–	35 W*	P32d-2	**1 987 302 904**	

H1

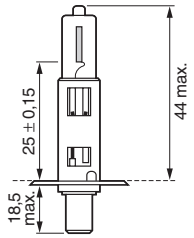

H1	Pure Light	12 V	55 W	P14,5s	**1 987 302 011**	**1 987 301 005**
H1	Plus 30	12 V	55 W	P14,5s	**1 987 302 012**	**1 987 301 003**
H1	Plus 50	12 V	55 W	P14,5s	**1 987 302 019**	**1 987 301 041**
H1	Plus 50 Plus Life	12 V	55 W	P14,5s	**1 987 301 071**	**1 987 301 064**
H1	Plus 90	12 V	55 W	P14,5s	**1 987 301 073**	**1 987 301 076**
H1	Longlife Daytime	12 V	55 W	P14,5s	**1 987 302 018**	**1 987 301 051**
H1	Xenon Blue	12 V	55 W	P14,5s	**1 987 302 015**	**1 987 301 011**
H1	Xenon Silver	12 V	55 W	P14,5s	**1 987 301 080**	**1 987 301 067**
–	Rallye	12 V	100 W[1])	P14,5s	**1 987 302 016**	
H1	Trucklight	24 V	70 W	P14,5s	**1 987 302 411**	
H1	Trucklight + 100	24 V	70 W	P14,5s	**1 987 302 711**	

H2

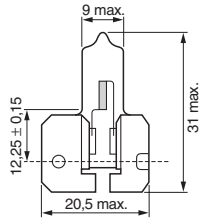

H2	Pure Light	12 V	55 W	X511	**1 987 302 022**	
H2	Trucklight	24 V	70 W	X511	**1 987 302 422**	

* Betrieb nur mit geeignetem elektronischem Vorschaltgerät. / Operation only with suitable electronic ballast unit.
Utilisation uniquement avec module électronique de commande adéquat. / Funzionamento soltanto con l'apposito stabilizzatore elettronico. / Funciona solo con la unidad de control electrónica apropiada.

[1]) Nicht im Geltungsbereich von ECE und StVZO zulässig.
Not permitted where StVZO (FMVSS/CUR) applies.
N'est pas homologué par le Code de la Route.
Non ammesso in ambito di ECE e StVZO.
No autorizada dentro del ámbito del StVZO (código de circulation alemán).

Fig.	ECE		U V	P W			

H3

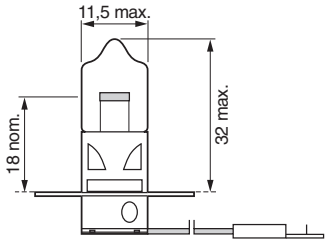

H3	Pure Light	12 V	55 W	PK22s	**1 987 302 031**	**1 987 301 006**
H3	Longlife Daytime	12 V	55 W	PK22s	**1 987 302 038**	**1 987 301 053**
H3	Xenon Blue	12 V	55 W	PK22s	**1 987 302 035**	**1 987 301 007**
–	Rallye	12 V	100 W[1)]	PK22s	**1 987 302 036**	
H3	Trucklight	24 V	70 W	PK22s	**1 987 302 431**	
H3	Trucklight + 100	24 V	70 W	PK22s	**1 987 302 731**	

H4

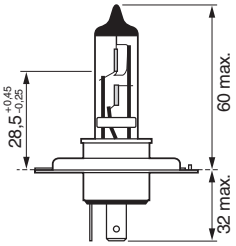

H4	Pure Light	12 V	60/55 W	P43t	**1 987 302 041**	**1 987 301 001**
H4	Pure Light Heavy Duty	12 V	60/55 W	P43t	**1 987 302 047**	
H4	Plus 30	12 V	60/55 W	P43t	**1 987 302 042**	**1 987 301 002**
H4	Plus 60	12 V	60/55 W	P43t	**1 987 302 049**	**1 987 301 040**
H4	Plus 60 Plus Life	12 V	60/55 W	P43t	**1 987 301 070**	**1 987 301 065**
H4	Plus 90	12 V	60/55 W	P43t	**1 987 301 074**	**1 987 301 077**
H4	Longlife Daytime	12 V	60/55 W	P43t	**1 987 302 048**	**1 987 301 054**
H4	Xenon Blue	12 V	60/55 W	P43t	**1 987 302 045**	**1 987 301 010**
H4	Xenon Silver	12 V	60/55 W	P43t	**1 987 301 081**	**1 987 301 068**
–	Rallye	12 V	100/80 W[1)]	P43t	**1 987 302 046**	
H4	Trucklight	24 V	75/70 W	P43t	**1 987 302 441**	
H4	Trucklight Heavy Duty	24 V	75/70 W	P43t	**1 987 302 442**	
H4	Trucklight + 100	24 V	75/70 W	P43t	**1 987 302 741**	

H7

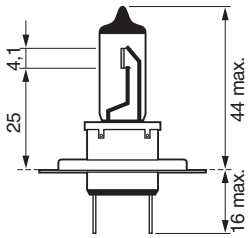

H7	Pure Light	12 V	55 W	PX26d	**1 987 302 071**	**1 987 301 012**
H7	Plus 50	12 V	55 W	PX26d	**1 987 302 079**	**1 987 301 042**
H7	Plus 50 Plus Life	12 V	55 W	PX26d	**1 987 301 072**	**1 987 301 066**
H7	Plus 90	12 V	55 W	PX26d	**1 987 301 075**	**1 987 301 078**
H7	Longlife Daytime	12 V	55 W	PX26d	**1 987 302 078**	**1 987 301 057**
H7	Xenon Blue	12 V	55 W	PX26d	**1 987 302 075**	**1 987 301 013**
H7	Xenon Silver	12 V	55 W	PX26d	**1 987 301 087**	**1 987 301 069**
H7	Trucklight	24 V	70 W	PX26d	**1 987 302 471**	
H7	Trucklight + 100	24 V	70 W	PX26d	**1 987 302 771**	

H8

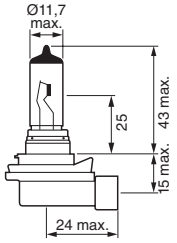

H8	Pure Light	12 V	35 W	PGJ19-1	**1 987 302 081**	

de **Scheinwerfer-lampen** (Fortsetzung)

en **Headlamp bulbs** (continued)

fr **Lampes pour projecteurs** (suite)

it **Lampadine per fari principali** (seguito)

es **Lámparas para faros** (continuación)

H9

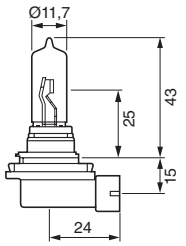

Fig.	ECE		U V	P W			
H9		Pure Light	12 V	65 W	PGJ19-5	**1 987 302 082**	

H10

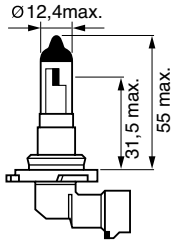

H10	Pure Light	12 V	42 W	PY20d	**1 987 302 083**	

H11

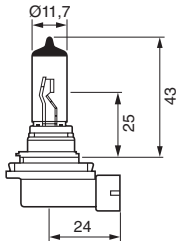

H11	Pure Light	12 V	55 W	PGJ19-2	**1 987 302 084**	
H11	Trucklight + 100	24 V	70 W	PGJ19-2	**1 987 302 784**	

R2

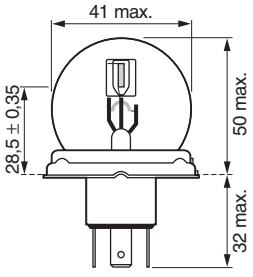

R2	Pure Light	12 V	45/40 W	P45t	**1 987 302 023**	**1 987 301 020**
R2	Pure Light	24 V	55/50 W	P45t	**1 987 302 421**	
R2	Pure Light	6 V	45/40 W	P45t	**1 987 302 614**	

Fig.	ECE		U V	P W			

R2 Halogen

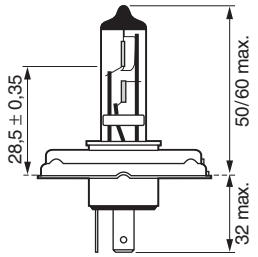

R2 Halogen	Pure Light	12 V	45/40 W	P45t	**1 987 302 021**	**1 987 301 021**

HB3/HB4

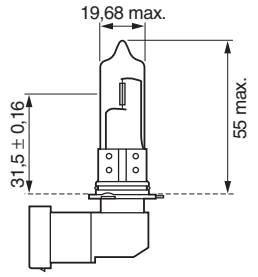

HB3	Pure Light	12 V	60 W	P20d	**1 987 302 152**	**1 987 301 062**
HB3	Xenon Blue	12 V	60 W	P20d	**1 987 302 154**	
HB4	Pure Light	12 V	51 W	P22d	**1 987 302 153**	**1 987 301 063**
HB4	Xenon Blue	12 V	51 W	P22d	**1 987 302 155**	

de
Stopplichtlampen
Blinklichtlampen
Schlusslichtlampen

en
Stop-lamp/ turn-signal-lamp bulbs
Tail-lamps

fr
Lampes pour feux de stop/et clignotants
Lampes pour feux arrière

it
Lampadine per stop, indicatori di direzione, luci posteriori

es
Lámparas para luces de freno e intermitentes
Lámparas para pilotos

Fig.	ECE		U V	P W			
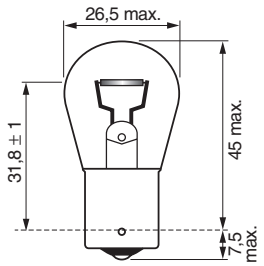	P21W	Pure Light	12 V	21 W	BA15s	**1 987 302 201**	**1 987 301 017**
	P21W	Longlife Daytime	12 V	21 W	BA15s	**1 987 302 280**	**1 987 301 050**
	P21W	Trucklight	24 V	21 W	BA15s	**1 987 302 501**	
	P21W	Trucklight Heavy Duty	24 V	21 W	BA15s	**1 987 302 503**	
	P21W	Pure Light	6 V	21 W	BA15s	**1 987 302 607**	
	PY21W	Pure Light	12 V	21 W	BAU15s	**1 987 302 213**	**1 987 301 018**
	PY21W	Magic Effect	12 V	21 W	BAU15s		**1 987 301 025**
	PY21W	Trucklight Heavy Duty	24 V	21 W	BAU15s	**1 987 302 502**	
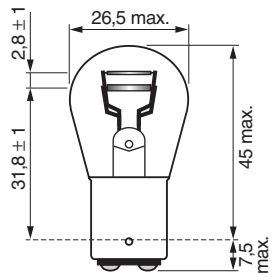	P21/4W	Pure Light	12 V	21/4 W	BAZ15d	**1 987 302 215**	**1 987 301 015**
	P21/5W	Pure Light	12 V	21/5 W	BAY15d	**1 987 302 202**	**1 987 301 016**
	P21/5W	Longlife Daytime	12 V	21/5 W	BAY15d	**1 987 302 282**	**1 987 301 055**
	P21/5W	Trucklight	24 V	21/5 W	BAY15d	**1 987 302 524**	
	P21/5W	Pure Light	6 V	21/5 W	BAY15d	**1 987 302 609**	
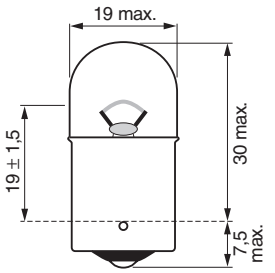	R5W	Pure Light	12 V	5 W	BA15s	**1 987 302 204**	**1 987 301 022**
	R5W	Longlife Daytime	12 V	5 W	BA15s	**1 987 302 284**	**1 987 301 058**
	R5W	Trucklight	24 V	5 W	BA15s	**1 987 302 510**	
	R5W	Trucklight Heavy Duty	24 V	5 W	BA15s	**1 987 302 511**	
	R5W	Pure Light	6 V	5 W	BA15s	**1 987 302 605**	
	R10W	Pure Light	12 V	10 W	BA15s	**1 987 302 203**	**1 987 301 019**
	R10W	Longlife Daytime	12 V	10 W	BA15s	**1 987 302 283**	**1 987 301 059**
	R10W	Trucklight	24 V	10 W	BA15s	**1 987 302 505**	
	R10W	Trucklight Heavy Duty	24 V	10 W	BA15s	**1 987 302 506**	
	R10W	Pure Light	6 V	10 W	BA15s	**1 987 302 604**	
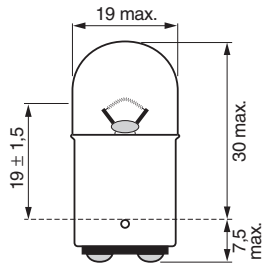	R5W	Pure Light	12 V	5 W	BA15d	**1 987 302 237**	
	R5W	Trucklight	24 V	5 W	BA15d	**1 987 302 527**	
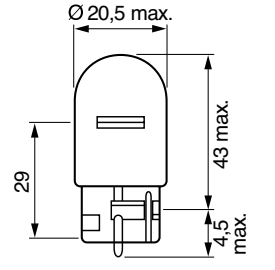	W21W	Pure Light	12 V	21 W	W3x16d	**1 987 302 251**	

Fig.	ECE		$\frac{U}{V}$	$\frac{P}{W}$			
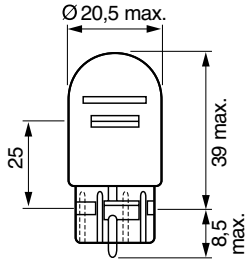	W21/5W	Pure Light	12 V	21/5 W	W3x16q	**1 987 302 252**	

de
Mini-Halogen-lampen, Glas-sockellampen

en
Mini halogen lamps, wedge base lamps

fr
Lampes halogène mini, lampes »wedge base«

it
Lampadine mini alogene, lampadine con attaco vetro

es
Lámparas halógenas mini, lámparas con casquillo de vidrio

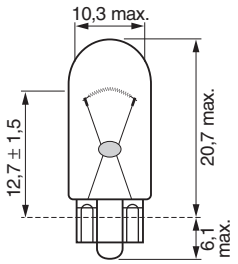

Fig.	ECE		U V	P W			
W3W	Pure Light	12 V	3 W	W2,1x9,5d	**1 987 302 217**	**1 987 301 028**
W3W	Trucklight	24 V	3 W	W2,1x9,5d	**1 987 302 517**	
W5W	Pure Light	12 V	5 W	W2,1x9,5d	**1 987 302 206**	**1 987 301 026**
W5W	Longlife Daytime	12 V	5 W	W2,1x9,5d	**1 987 302 286**	**1 987 301 052**
W5W	Xenon Blue	12 V	5 W	W2,1x9,5d		**1 987 301 033**
W5W	Trucklight	24 V	5 W	W2,1x9,5d	**1 987 302 518**	
WY5W	Pure Light	12 V	5 W	W2,1x9,5d	**1 987 302 241**	
–	Pure Light	12 V	2 W	W2,1x9,5d	**1 987 302 223**	
–	Trucklight	24 V	2 W	W2,1x9,5d	**1 987 302 516**	

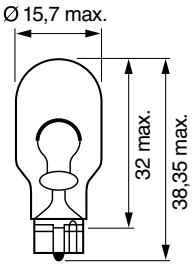

W16W	Pure Light	12 V	16 W	W2,1x9,5d	**1 987 302 205**	

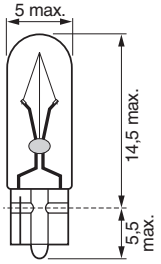

W2,3W	Pure Light	12 V	2,3 W	W2x4,6d	**1 987 302 240**	
–	Pure Light	12 V	1,2 W	W2x4,6d	**1 987 302 208**	**1 987 301 024**
–	Pure Light	12 V	2 W	W2x4,6d	**1 987 302 218**	
–	Trucklight	24 V	1,2 W	W2x4,6d	**1 987 302 504**	

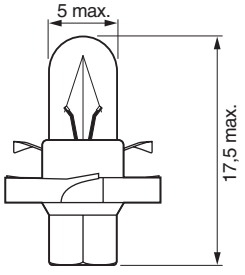

–	Pure Light	12 V	1,2 W	BX8,4d	**1 987 302 243**	
–	Pure Light	12 V	1,2 W	BX8,4d	**1 987 302 235**	
–	Pure Light	12 V	1,3W	BX8,4d	**1 987 302 254**	
–	Pure Light	12 V	1,5 W	BX8,4d	**1 987 302 255**	
–	Pure Light	12 V	2 W	BX8,4d	**1 987 302 236**	

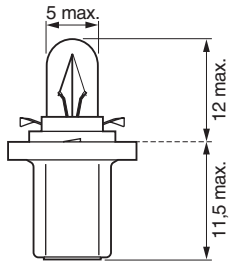

–	Pure Light	12 V	1,2 W	B8,5d	**1 987 302 219**	
–	Pure Light	12 V	2 W	B8,5d	**1 987 302 221**	
–	Pure Light	12 V	1,5 W	B8,5d	**1 987 302 256**	
–	Trucklight	24 V	1,2 W	B8,5d	**1 987 302 514**	

Fig.	ECE		U V	P W			
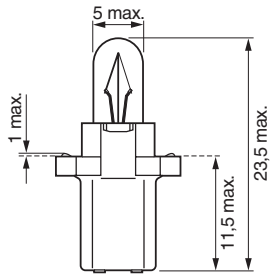	–	Pure Light	12 V	1,2 W	B8,3d	**1 987 302 220**	
	–	Pure Light	12 V	2 W	B8,3d	**1 987 302 244**	
	–	Trucklight	24 V	1,2 W	B8,3d	**1 987 302 515**	
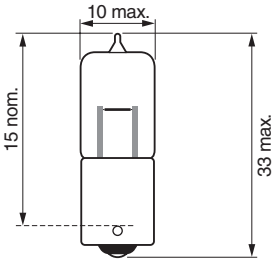	–	Pure Light	12 V	5 W	BA9s	**1 987 302 231**	
	–	Pure Light	12 V	10 W	BA9s	**1 987 302 233**	
	–	Pure Light	12 V	20 W	BA9s	**1 987 302 245**	

de **Standlicht-/ Anzeigenlampen**

en **Parking-light/ indicator lamps**

fr **Lampes pour feux de position/ témoin**

it **Lampadine per luci di posizione e di direzione**

es **Lámparas para luz de población e indicaciones**

Fig.	ECE		U V	P W			
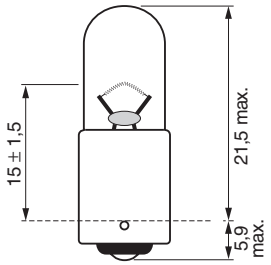	T4W	Pure Light	12 V	4 W	BA9s	**1 987 302 207**	**1 987 301 023**
	T4W	Longlife Daytime	12 V	4 W	BA9s	**1 987 302 287**	**1 987 301 056**
	T4W	Xenon Blue	12 V	4 W	BA9s	**–**	**1 987 301 034**
	T4W	Trucklight	24 V	4 W	BA9s	**1 987 302 512**	
	T4W	Trucklight Heavy Duty	24 V	4 W	BA9s	**1 987 302 525**	
	T4W	Pure Light	6 V	4 W	BA9s	**1 987 302 603**	
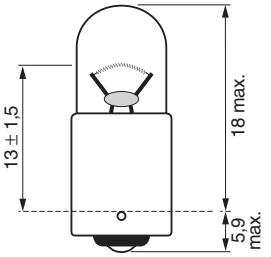	–	Pure Light	12 V	2 W	BA9s	**1 987 302 212**	
	–	Trucklight	24 V	2 W	BA9s	**1 987 302 508**	
	–	Pure Light	24 V	2 W	BA9s	**1 987 302 613**	
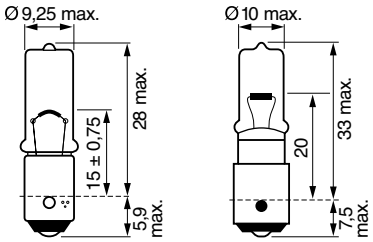	H6W	Pure Light	12 V	6 W	BAX9s	**1 987 302 232**	**1 987 301 035**
	H6W	Longlife Daytime	12 V	6 W	BAX9s		**1 987 301 061**
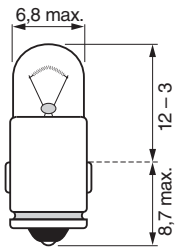	–	Pure Light	12 V	2 W	BA7s	**1 987 302 224**	
	–	Trucklight	24 V	3 W	BA7s	**1 987 302 519**	
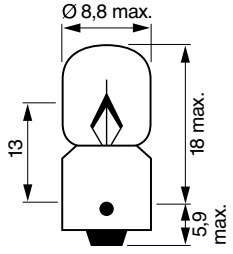	–	Pure Light	12 V	3 W	BA9s	**1 987 302 248**	

de **Soffittenlampen** | en **Festoon bulbs** | fr **Lampes navettes** | it **Lampadine siluro** | es **Lámparas de neón**

Fig.	ECE		U V	P W			
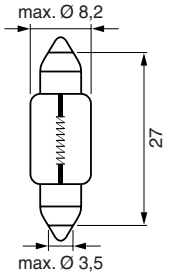	–	Pure Light	12 V	3 W	SV7-8	**1 987 302 226**	
	–	Trucklight	24 V	3 W	SV7-8	**1 987 302 528**	
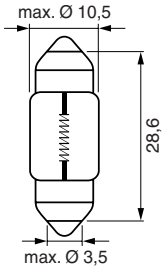	–	Pure Light	12 V	10 W	SV8,5-8	**1 987 302 227**	
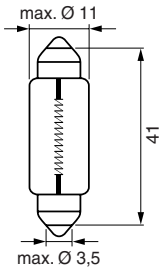	–	Pure Light	12 V	5 W	SV8,5-8	**1 987 302 225**	
	–	Pure Light	12 V	10 W	SV8,5-8	**1 987 302 210**	**1 987 301 014**
	–	Trucklight	24 V	5 W	SV8,5-8	**1 987 302 520**	
	–	Trucklight	24 V	10 W	SV8,5-8	**1 987 302 521**	
	–	Pure Light	6 V	10 W	SV8,5-8	**1 987 302 612**	
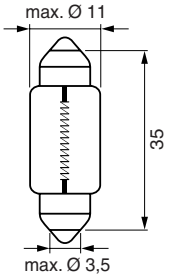	C5W	Pure Light	12 V	5 W	SV8,5-8	**1 987 302 211**	**1 987 301 004**
	C5W	Longlife Daytime	12 V	5 W	SV8,5-8	**1 987 302 281**	**1 987 301 060**
	C5W	Trucklight	24 V	5 W	SV8,5-8	**1 987 302 507**	
	–	Pure Light	12 V	10 W	SV8,5-8	**1 987 302 228**	
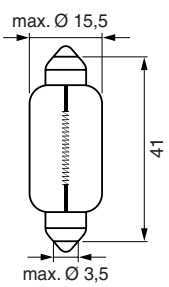	C21W	Pure Light		21 W	SV8,5-8	**1 987 302 230**	
	–	Pure Light		15 W	SV8,5-8	**1 987 302 238**	
	–	Pure Light		18 W	SV8,5-8	**1 987 302 229**	

de **Sockelbauarten**

en **Base types**

fr **Types de culots**

it **Tavola degli attacchi**

es **Tipo de casquillos**

B8,3d



B8,5d



BA7s

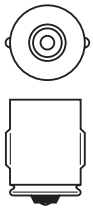

BA9s



BA15d



BA15s



BAU15s



BAX9s

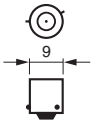

BAY15d



BAZ15d



BX8,4d



E10



EP10



P14.5s



P20d

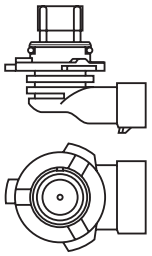

P22d

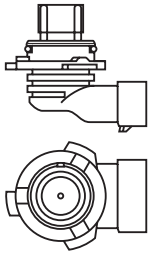

P26s

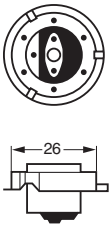

P32d-2

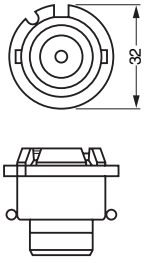

P32d-3

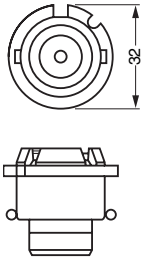

P43t

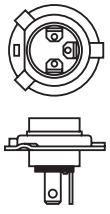

P45t	PGJ19-1	PGJ19-2	PGJ19-5	PK22s
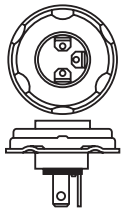	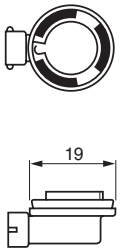	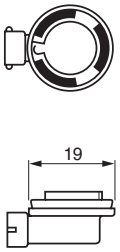	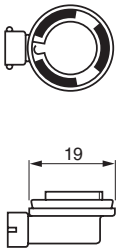	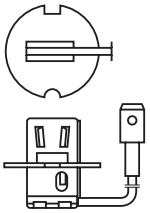

PY20d	PX26d	SV7-8	SV8,5-8	W2x4,6d
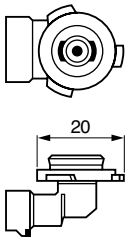	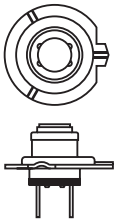	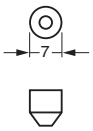	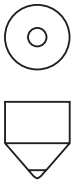	

W2,1x9,5d	W3x16d	W3x16q	X511
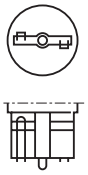			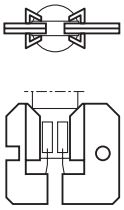

de
Werkstatt-Programm
nach Bestellnummern sortiert

en
Workshop program
by part number in ascending order

fr
Gamme atelier
par ordre croissant des références

it
Programma per l'officina
ordinato per codice di ordinazione

es
Programa de taller
ordenada por referencia de pedido





	ECE		$\frac{P}{W}$	

12 Volt

1 987 302 011	H1	Pure Light	55 W	P14,5s
1 987 302 012	H1	Plus 30	55 W	P14,5s
1 987 302 015	H1	Xenon Blue	55 W	P14,5s
1 987 302 016	–	Rallye	100 W	P14,5s
1 987 302 018	H1	Longlife Daytime	55 W	P14,5s
1 987 302 019	H1	Plus 50	55 W	P14,5s
1 987 302 021	R2 Halogen	Pure Light	45/40 W	P45t
1 987 302 022	H2	Pure Light	55 W	X511
1 987 302 023	R2	Pure Light	45/40 W	P45t
1 987 302 031	H3	Pure Light	55 W	PK22s
1 987 302 035	H3	Xenon Blue	55 W	PK22s
1 987 302 036	–	Rallye	100 W	PK22s
1 987 302 038	H3	Longlife Daytime	55 W	PK22s
1 987 302 041	H4	Pure Light	60/55 W	P43t
1 987 302 042	H4	Plus 30	60/55 W	P43t
1 987 302 045	H4	Xenon Blue	60/55 W	P43t
1 987 302 046	–	Rallye	100/80 W	P43t
1 987 302 047	H4	Pure Light Heavy Duty	60/55 W	P43t
1 987 302 048	H4	Longlife Daytime	60/55 W	P43t
1 987 302 049	H4	Plus 60	60/55 W	P43t
1 987 302 071	H7	Pure Light	55 W	PX26d
1 987 302 075	H7	Xenon Blue	55 W	PX26d
1 987 302 078	H7	Longlife Daytime	55 W	PX26d
1 987 302 079	H7	Plus 50	55 W	PX26d
1 987 302 081	H8	Pure Light	35 W	PGJ19-1
1 987 302 082	H9	Pure Light	65 W	PGJ19-5
1 987 302 083	H10	Pure Light	42 W	PY20d
1 987 302 084	H11	Pure Light	55 W	PGJ19-2
1 987 302 152	HB3	Pure Light	60 W	P20d
1 987 302 153	HB4	Pure Light	51 W	P22d
1 987 302 154	HB3	Xenon Blue	60 W	P20d
1 987 302 155	HB4	Xenon Blue	51 W	P22d
1 987 302 201	P21W	Pure Light	21 W	BA15s
1 987 302 202	P21/5W	Pure Light	21/5 W	BAY15d
1 987 302 203	R10W	Pure Light	10 W	BA15s
1 987 302 204	R5W	Pure Light	5 W	BA15s
1 987 302 205	W16W	Pure Light	16 W	W2,1x9,5d
1 987 302 206	W5W	Pure Light	5 W	W2,1x9,5d
1 987 302 207	T4W	Pure Light	4 W	BA9s
1 987 302 208	–	Pure Light	1,2 W	W2x4,6d
1 987 302 210	–	Pure Light	10 W	SV8,5-8
1 987 302 211	C5W	Pure Light	5 W	SV8,5-8
1 987 302 212	–	Pure Light	2 W	BA9s
1 987 302 213	PY21W	Pure Light	21 W	BAU15s
1 987 302 214	–	Pure Light	18 W	BA15s
1 987 302 215	P21/4W	Pure Light	21/4 W	BAZ15d
1 987 302 217	W3W	Pure Light	3 W	W2,1x9,5d
1 987 302 218	–	Pure Light	2 W	W2x4,6d
1 987 302 219	–	Pure Light	1,2 W	B8,5d
1 987 302 220	–	Pure Light	1,2 W	B8,3d
1 987 302 221	–	Pure Light	2 W	B8,5d
1 987 302 223	–	Pure Light	2 W	W2,1x9,5d
1 987 302 224	–	Pure Light	2 W	BA7s

	ECE		P W	
1 987 302 225	–	Pure Light	5 W	SV8,5-8
1 987 302 226	–	Pure Light	3 W	SV7-8
1 987 302 227	–	Pure Light	10 W	SV8,5-8
1 987 302 228	–	Pure Light	10 W	SV8,5-8
1 987 302 229	–	Pure Light	18 W	SV8,5-8
1 987 302 230	C21W	Pure Light	21 W	SV8,5-8
1 987 302 231	–	Pure Light	5 W	BA9s
1 987 302 232	H6W	Pure Light	6 W	BAX9s
1 987 302 233	–	Pure Light	10 W	BA9s
1 987 302 235	–	Pure Light	1,2 W	BX8,4d
1 987 302 236	–	Pure Light	2 W	BX8,4d
1 987 302 237	R5W	Pure Light	5 W	BA15d
1 987 302 238	–	Pure Light	15 W	SV8,5-8
1 987 302 240	W2,3W	Pure Light	2,3 W	W2x4,6d
1 987 302 241	WY5W	Pure Light	5 W	W2,1x9,5d
1 987 302 243	–	Pure Light	1,1 W	BX8,4d
1 987 302 244	–	Pure Light	2 W	B8,3d
1 987 302 245	–	Pure Light	20 W	BA9s
1 987 302 248	–	Pure Light	3 W	BA9s
1 987 302 251	W21W	Pure Light	21 W	W3x16d
1 987 302 252	W21/5W	Pure Light	21/5 W	W3x16q
1 987 302 254	–	Pure Light	1,3 W	BX8,4d
1 987 302 255	–	Pure Light	1,5 W	BX8,4d
1 987 302 256	–	Pure Light	1,5 W	B8,5d
1 987 302 280	P21W	Longlife Daytime	21 W	BA15s
1 987 302 281	C5W	Longlife Daytime	5 W	SV8,5-8
1 987 302 282	P21/5W	Longlife Daytime	21/5 W	BAY15d
1 987 302 283	R10W	Longlife Daytime	10 W	BA15s
1 987 302 284	R5W	Longlife Daytime	5 W	BA15s
1 987 302 286	W5W	Longlife Daytime	5 W	W2,1x9,5d
1 987 302 287	T4W	Longlife Daytime	4 W	BA9s
1 987 301 071*	H1	Plus 50 Plus Life	55 W	P14,5s
1 987 301 070*	H4	Plus 60 Plus Life	60/55 W	P43t
1 987 301 072*	H7	Plus 50 Plus Life	55 W	PX26d
1 987 301 080*	H1	Xenon Silver	55 W	P14,5s
1 987 301 081*	H4	Xenon Silver	60/55 W	P43t
1 987 301 087*	H7	Xenon Silver	55 W	PX26d
1 987 301 073*	H1	Plus 90	55 W	P14,5s
1 987 301 074*	H4	Plus 90	60/55 W	P43t
1 987 301 075*	H7	Plus 90	55 W	PX26d

* Doppelschachtel – geeignet für SB und WS
* Double carton – Suitable for workshop and self-service packaging
* Boîte de deux – Pour emballage atelier et libre-service
* Confezione doppia – Adatto per confezioni da officina e self-service
* Caja doble – Adecuado para talleres y envase de autoservicio

24 Volt

1 987 302 411	H1	Trucklight	70 W	P14,5s
1 987 302 421	R2	Trucklight	55/50 W	P45t
1 987 302 422	H2	Trucklight	70 W	X511
1 987 302 431	H3	Trucklight	70 W	PK22s
1 987 302 441	H4	Trucklight	75/70 W	P43t
1 987 302 442	H4	Trucklight Heavy Duty	75/70 W	P43t
1 987 302 471	H7	Trucklight	70 W	PX26d

de
Werkstatt-Programm
nach Bestellnummern sortiert (Fortsetzung)

en
Workshop program
by part number in ascending order (continued)

fr
Gamme atelier
par ordre croissant des références (suite)

it
Programma per l'officina
ordinato per codice di ordinazione (seguito)

es
Programa de taller
ordenada por referencia de pedido (continuación)

		ECE		$\frac{P}{W}$	
1 987 302 501	P21W	Trucklight	21 W	BA15s
1 987 302 502	PY21W	Trucklight Heavy Duty	21 W	BAU15s
1 987 302 503	P21W	Trucklight Heavy Duty	21 W	BA15s
1 987 302 504	–	Trucklight	1,2 W	W2x4,6d
1 987 302 505	R10W	Trucklight	10 W	BA15s
1 987 302 506	R10W	Trucklight Heavy Duty	10 W	BA15s
1 987 302 507	C5W	Trucklight	5 W	SV8,5-8
1 987 302 508	–	Trucklight	2 W	BA9s
1 987 302 510	R5W	Trucklight	5 W	BA15s
1 987 302 511	R5W	Trucklight Heavy Duty	5 W	BA15s
1 987 302 512	T4W	Trucklight	4 W	BA9s
1 987 302 514	–	Trucklight	1,2 W	B8,5d
1 987 302 515	–	Trucklight	1,2 W	B8,3d
1 987 302 516	–	Trucklight	2 W	W2,1x9,5d
1 987 302 517	W3W	Trucklight	3 W	W2,1x9,5d
1 987 302 518	W5W	Trucklight	5 W	W2,1x9,5d
1 987 302 519	–	Trucklight	3 W	BA7s
1 987 302 520	–	Trucklight	5 W	SV8,5-8
1 987 302 521	–	Trucklight	10 W	SV8,5-8
1 987 302 523	–	Trucklight	18 W	BA15s
1 987 302 524	P21/5W	Trucklight	21/5 W	BAY15d
1 987 302 525	T4W	Trucklight Heavy Duty	4 W	BA9s
1 987 302 526	–	Trucklight	15 W	BA15s
1 987 302 527	R5W	Trucklight	5 W	BA15d
1 987 302 528	–	Trucklight	3 W	SV7-8
1 987 302 711	H1	Trucklight +100	70 W	P14,5s
1 987 302 731	H3	Trucklight +100	70 W	PK22s
1 987 302 741	H4	Trucklight +100	75/70 W	P43t
1 987 302 771	H7	Trucklight +100	70 W	PX26d
1 987 302 784	H11	Trucklight +100	70 W	PGJ19-2

6 Volt

1 987 302 601	–	Pure Light	0,6 W	E10
1 987 302 602	–	Pure Light	2,4 W	EP10
1 987 302 603	T4W	Pure Light	4 W	BA9s
1 987 302 604	R10W	Pure Light	10 W	BA15s
1 987 302 605	R5W	Pure Light	5 W	BA15s
1 987 302 606	S3	Pure Light	15 W	P26s
1 987 302 607	P21W	Pure Light	21 W	BA15s
1 987 302 609	P21/5W	Pure Light	21/5 W	BAY15d
1 987 302 612	–	Pure Light	10 W	SV8,5-8
1 987 302 613	–	Pure Light	2 W	BA9s
1 987 302 614	R2	Pure Light	45/40 W	P45t

– Volt**

1 987 302 903	D2R	Xenon	35 W	P32d-3
1 987 302 904	D2S	Xenon	35 W	P32d-2
1 987 302 905	D1S	Xenon	35 W	PK32d-2

** Betrieb nur geeignet mit elektronischem Vorschaltgerät
Operation only with suitable electronic ballast unit
Utilisation uniquement avec module électronique de commande adequate
Funzionamento soltanto con l'apposito stabilizzatore elettronico
Funciona solo con la unidad de control electrónica apropiada

de
SB-Programm
nach Bestellnummern sortiert

en
Self-service program
by part number in ascending order

fr
Gamme libre-service
par ordre croissant des références

it
Programma self-service
ordinato per codice di ordinazione

es
Programa de autoservicio
ordenada por referencia de pedido

	ECE		U V	P W		pcs.
1 987 301 001	H4	Pure Light	12 V	60/55 W	P43t	1
1 987 301 002	H4	Plus 30	12 V	60/55 W	P43t	1
1 987 301 003	H1	Plus 30	12 V	55 W	P14,5s	1
1 987 301 004	C5W	Pure Light	12 V	5 W	SV8,5-8	2
1 987 301 005	H1	Pure Light	12 V	55 W	P14,5s	1
1 987 301 006	H3	Pure Light	12 V	55 W	PK22s	1
1 987 301 007	H3	Xenon Blue	12 V	55 W	PK22s	1
1 987 301 010	H4	Xenon Blue	12 V	60/55 W	P43t	1
1 987 301 011	H1	Xenon Blue	12 V	55 W	P14,5s	1
1 987 301 012	H7	Pure Light	12 V	55 W	PX26d	1
1 987 301 013	H7	Xenon Blue	12 V	55 W	PX26d	1
1 987 301 014	–	Pure Light	12 V	10 W	SV8,5-8	2
1 987 301 015	P21/4W	Pure Light	12 V	21/4 W	BAZ15d	2
1 987 301 016	P21/5W	Pure Light	12 V	21/5 W	BAY15d	2
1 987 301 017	P21W	Pure Light	12 V	21 W	BA15s	2
1 987 301 018	PY21W	Pure Light	12 V	21 W	BAU15s	2
1 987 301 019	R10W	Pure Light	12 V	10 W	BA15s	2
1 987 301 020	R2	Pure Light	12 V	45/40 W	P45t	1
1 987 301 021	R2 Halogen	Pure Light	12 V	45/40 W	P45t	1
1 987 301 022	R5W	Pure Light	12 V	5 W	BA15s	2
1 987 301 023	T4W	Pure Light	12 V	4 W	BA9s	2
1 987 301 024	–	Pure Light	12 V	1,2 W	W2x4,6d	2
1 987 301 025	PY21W	Magic Effect	12 V	21 W	BAU15s	2
1 987 301 026	W5W	Pure Light	12 V	5 W	W2,1x9,5d	2
1 987 301 028	W3W	Pure Light	12 V	3 W	W2,1x9,5d	2
1 987 301 033	W5W	Xenon Blue	12 V	5 W	W2,1x9,5d	2
1 987 301 034	T4W	Xenon Blue	12 V	4 W	BA9s	2
1 987 301 035	H6W	Pure Light	12 V	6 W	BAX9s	2
1 987 301 040	H4	Plus 60	12 V	60/55 W	P43t	1
1 987 301 041	H1	Plus 50	12 V	55 W	P14,5s	1
1 987 301 042	H7	Plus 50	12 V	55 W	PX26d	1
1 987 301 050	P21W	Longlife Daytime	12 V	21 W	BA15s	2
1 987 301 051	H1	Longlife Daytime	12 V	55 W	P14,5s	1
1 987 301 052	W5W	Longlife Daytime	12 V	5 W	W2,1x9,5d	2
1 987 301 053	H3	Longlife Daytime	12 V	55 W	PK22s	1
1 987 301 054	H4	Longlife Daytime	12 V	60/55 W	P43t	1
1 987 301 055	P21/5W	Longlife Daytime	12 V	21/5 W	BAY15d	2
1 987 301 056	T4W	Longlife Daytime	12 V	4 W	BA9s	2
1 987 301 057	H7	Longlife Daytime	12 V	55 W	PX26d	1
1 987 301 058	R5W	Longlife Daytime	12 V	5 W	BA15s	2
1 987 301 059	R10W	Longlife Daytime	12 V	10 W	BA15s	2
1 987 301 060	C5W	Longlife Daytime	12 V	5 W	SV8,5-8	2
1 987 301 061	H6W	Longlife Daytime	12 V	6 W	BAX9s	2
1 987 301 062	HB3	Pure Light	12 V	60 W	P20d	1
1 987 301 063	HB4	Pure Light	12 V	51 W	P22d	1
1 987 301 064	H1	Plus 50 Plus Life	12 V	55 W	P14,5s	1
1 987 301 065	H4	Plus 60 Plus Life	12 V	60/55 W	P43t	1
1 987 301 066	H7	Plus 50 Plus Life	12 V	55 W	PX26d	1
1 987 301 067	H1	Xenon Silver	12 V	55 W	P14,5s	1
1 987 301 068	H4	Xenon Silver	12 V	60/55 W	P43t	1
1 987 301 069	H7	Xenon Silver	12 V	55 W	PX26d	1
1 987 301 076	H1	Plus 90	12 V	55 W	P14,5s	1
1 987 301 077	H4	Plus 90	12 V	60/55 W	P43t	1
1 987 301 078	H7	Plus 90	12 V	55 W	PX26d	1

de
SB-Programm
nach Bestellnummern sortiert

en
Self-service program
by part number in ascending order

fr
Gamme libre-service
par ordre croissant des références

it
Programma self-service
ordinato per codice di ordinazione

es
Programa de autoservicio
ordenada por referencia de pedido

	ECE		U V	P W		pcs.
1 987 301 071*	H1	Plus 50 Plus Life	12 V	55 W	P14,5s	1
1 987 301 070*	H4	Plus 60 Plus Life	12 V	60/55 W	P43t	1
1 987 301 072*	H7	Plus 50 Plus Life	12 V	55 W	PX26d	1
1 987 301 080*	H1	Xenon Silver	12 V	55 W	P14,5s	1
1 987 301 081*	H4	Xenon Silver	12 V	60/55 W	P43t	1
1 987 301 087*	H7	Xenon Silver	12 V	55 W	PX26d	1
1 987 301 073*	H1	Plus 90	12 V	55 W	P14,5s	1
1 987 301 074*	H4	Plus 90	12 V	60/55 W	P43t	1
1 987 301 075*	H7	Plus 90	12 V	55 W	PX26d	1

* Doppelschachtel – geeignet für SB und WS / Double carton – Suitable for workshop and self-service packaging / Boîte de deux – Pour emballage atelier et libre-service / Confezione doppia – Adatto per confezioni da officina e self-service / Caja doble – Adecuado para talleres y envase de autoservicio

de **SB-Programm**
(nach Produktlinie sortiert)

en **Self-service program**
(by product line in ascending order)

fr **Gamme libre-service**
(par ordre croissant des lines produit)

it **Programma self-service**
(ordinato per linea di prodotto)

es **Programa de autoservicio**
(ordenada por linea de producto)

ECE	U V	P W			pcs.	EAN	mm
Pure Light							
C5W	12 V	5 W	SV8,5-8	**1 987 301 004**	2	3 165141 22871 7	1,1 x 9,5 x 13,5
H1	12 V	55 W	P14,5s	**1 987 301 005**	1	3 165141 22872 4	3,0 x 9,5 x 13,5
H3	12 V	55 W	PK22s	**1 987 301 006**	1	3 165141 22873 1	2,0 x 9,5 x 13,5
H4	12 V	60/55 W	P43t	**1 987 301 001**	1	3 165141 22867 0	5,0 x 9,5 x 13,5
H6W	12 V	6 W	BAX9s	**1 987 301 035**	2	3 165143 23488 4	1,1 x 9,5 x 13,5
H7	12 V	55 W	PX26d	**1 987 301 012**	1	3 165141 22879 3	3,5 x 9,5 x 13,5
HB3	12 V	60 W	P20d	**1 987 301 062**	1	3 165143 98579 3	3,5 x 9,5 x 13,5
HB4	12 V	51 W	P22d	**1 987 301 063**	1	3 165143 98580 9	3,5 x 9,5 x 13,5
P21W	12 V	21 W	BA15s	**1 987 301 017**	2	3 165141 22884 7	2,6 x 9,5 x 13,5
P21/4W	12 V	21/4 W	BAZ15d	**1 987 301 015**	2	3 165141 22882 3	2,6 x 9,5 x 13,5
P21/5W	12 V	21/5 W	BAY15d	**1 987 301 016**	2	3 165141 22883 0	2,6 x 9,5 x 13,5
PY21W	12 V	21 W	BAU15s	**1 987 301 018**	2	3 165141 22885 4	2,6 x 9,5 x 13,5
PY21W Magic Effect	12 V	21 W	BAU15s	**1 987 301 025**	2	3 165143 47617 8	2,6 x 9,5 x 13,5
R2	12 V	45/40 W	P45t	**1 987 301 020**	1	3 165143 23492 1	5,0 x 9,5 x 13,5
R2 Halogen	12 V	45/40 W	P45t	**1 987 301 021**	1	3 165141 22888 5	5,0 x 9,5 x 13,5
R5W	12 V	5 W	BA15s	**1 987 301 022**	2	3 165141 22889 2	2,0 x 9,5 x 13,5
R10W	12 V	10 W	BA15s	**1 987 301 019**	2	3 165141 22886 1	2,0 x 9,5 x 13,5
T4W	12 V	4 W	BA9s	**1 987 301 023**	2	3 165141 22890 8	6,0 x 9,5 x 13,5
W3W	12 V	3 W	W2,1x9,5d	**1 987 301 028**	2	3 165141 65008 2	6,0 x 9,5 x 13,5
W5W	12 V	5 W	W2,1x9,5d	**1 987 301 026**	2	3 165141 22893 9	6,0 x 9,5 x 13,5
–	12 V	10 W	SV8,5-8	**1 987 301 014**	2	3 165141 22881 6	1,1 x 9,5 x 13,5
–	12 V	1,2 W	W2x4,6d	**1 987 301 024**	2	3 165141 22891 5	6,0 x 9,5 x 13,5
Plus 30							
H1	12 V	55 W	P14,5s	**1 987 301 003**	1	3 165141 22869 4	3,0 x 9,5 x 13,5
H4	12 V	60/55 W	P43t	**1 987 301 002**	1	3 165141 22868 7	5,0 x 9,5 x 13,5
Plus 50/60							
H1	12 V	55 W	P14,5s	**1 987 301 041**	1	3 165143 31998 7	3,0 x 9,5 x 13,5
H4	12 V	60/55 W	P43t	**1 987 301 040**	1	3 165143 28238 0	5,0 x 9,5 x 13,5
H7	12 V	55 W	PX26d	**1 987 301 042**	1	3 165143 35528 2	3,5 x 9,5 x 13,5
Plus 50/60 Plus Life							
H1	12 V	55 W	P14,5s	**1 987 301 064**	1	4 047024 28823 2	3,0 x 9,5 x 13,5
H1	12 V	55 W	P14,5s	**1 987 301 071 ***	2	3 165143 93604 7	5,2 x 9,5 x 12,3
H4	12 V	60/55 W	P43t	**1 987 301 065**	1	4 047024 28824 9	5,0 x 9,5 x 13,5
H4	12 V	60/55 W	P43t	**1 987 301 070 ***	2	3 165143 93603 0	5,2 x 9,5 x 12,3
H7	12 V	55 W	PX26d	**1 987 301 066**	1	4 047024 28825 6	3,5 x 9,5 x 13,5
H7	12 V	55 W	PX26d	**1 987 301 072 ***	2	3 165143 93605 4	5,2 x 9,5 x 12,3
Plus 90							
H1	12 V	55 W	P14,5s	**1 987 301 076**	1	4 047024 44809 4	3,0 x 9,5 x 13,5
H1	12 V	55 W	P14,5s	**1 987 301 073 ***	2	4 047024 44812 4	5,2 x 9,5 x 12,3
H4	12 V	60/55 W	P43t	**1 987 301 077**	1	4 047024 44811 7	5,0 x 9,5 x 13,5
H4	12 V	60/55 W	P43t	**1 987 301 074 ***	2	4 047024 44813 1	5,2 x 9,5 x 12,3
H7	12 V	55 W	PX26d	**1 987 301 078**	1	4 047024 44810 0	3,5 x 9,5 x 13,5
H7	12 V	55 W	PX26d	**1 987 301 075 ***	2	4 047024 44814 8	5,2 x 9,5 x 12,3

de **SB-Programm**
(nach Produktlinie sortiert)
(Fortsetzung)

en **Self-service program**
(by product line in ascending order)
(continued)

fr **Gamme libre-service**
(par ordre croissant des lines produit)
(suite)

it **Programma self-service**
(ordinato per linea di prodotto)
(seguito)

es **Programa de autoservicio**
(ordenada por linea de producto)
(continuación)

ECE	U V	P W			pcs.	EAN	mm
Longlife Daytime							
C5W	12 V	5 W	SV8,5-8	**1 987 301 060**	2	3 165143 48212 4	1,1 x 9,5 x 13,5
H1	12 V	55 W	P14,5s	**1 987 301 051**	1	3 165143 48203 2	3,0 x 9,5 x 13,5
H3	12 V	55 W	PK22s	**1 987 301 053**	1	3 165143 48205 6	2,0 x 9,5 x 13,5
H4	12 V	60/55 W	P43t	**1 987 301 054**	1	3 165143 48206 3	5,0 x 9,5 x 13,5
H6W	12 V	6 W	BAX9s	**1 987 301 061**	2	3 165143 48213 1	1,1 x 9,5 x 13,5
H7	12 V	55 W	PX26d	**1 987 301 057**	1	3 165143 48209 4	3,5 x 9,5 x 13,5
P21W	12 V	21 W	BA15s	**1 987 301 050**	2	3 165143 48202 5	2,6 x 9,5 x 13,5
P21/5W	12 V	21/5 W	BAY15d	**1 987 301 055**	2	3 165143 48207 0	2,6 x 9,5 x 13,5
R5W	12 V	5 W	BA15s	**1 987 301 058**	2	3 165143 48210 0	2,0 x 9,5 x 13,5
R10W	12 V	10 W	BA15s	**1 987 301 059**	2	3 165143 48211 7	2,0 x 9,5 x 13,5
T4W	12 V	4 W	BA9s	**1 987 301 056**	2	3 165143 48208 7	6,0 x 9,5 x 13,5
W5W	12 V	5 W	W2,1x9,5d	**1 987 301 052**	2	3 165143 48204 9	6,0 x 9,5 x 13,5
Xenon Blue							
H1	12 V	55 W	P14,5s	**1 987 301 011**	1	3 165141 22878 6	3,0 x 9,5 x 13,5
H3	12 V	55 W	PK22s	**1 987 301 007**	1	3 165143 17972 7	2,0 x 9,5 x 13,5
H4	12 V	60/55 W	P43t	**1 987 301 010**	1	3 165141 22877 9	5,0 x 9,5 x 13,5
H7	12 V	55 W	PX26d	**1 987 301 013**	1	3 165141 22880 9	3,5 x 9,5 x 13,5
T4W	12 V	4 W	BA9s	**1 987 301 034**	2	3 165143 23491 4	6,0 x 9,5 x 13,5
W5W	12 V	5 W	W2,1x9,5d	**1 987 301 033**	2	3 165143 23490 7	6,0 x 9,5 x 13,5
Xenon Silver							
H1	12 V	55 W	P14,5s	**1 987 301 067**	1	4 047024 28820 1	3,0 x 9,5 x 13,5
H1	12 V	55 W	P14,5s	**1 987 301 080 ***	2	4 047024 28932 1	5,2 x 9,5 x 12,3
H4	12 V	60/55 W	P43t	**1 987 301 068**	1	4 047024 28821 8	5,0 x 9,5 x 13,5
H4	12 V	60/55 W	P43t	**1 987 301 081 ***	2	4 047024 28933 8	5,2 x 9,5 x 12,3
H7	12 V	55 W	PX26d	**1 987 301 069**	1	4 047024 28822 5	3,5 x 9,5 x 13,5
H7	12 V	55 W	PX26d	**1 987 301 087 ***	2	4 047024 29187 4	5,2 x 9,5 x 12,3
Ersatzlampenbox / Spare lamps boxes / Coffrets de lampes à rechange / Box per lampade di ricambio / Estuchos de lamparas de recambio							
H1 Minibox	12 V	–	–	**1 987 301 102**	–	3 165141 232851	5,2 x 6,3 x 11,2
H4 Minibox	12 V	–	–	**1 987 301 101**	–	3 165141 228700	5,2 x 6,3 x 11,2
H7 Minibox	12 V	–	–	**1 987 301 103**	–	3 165141 232868	5,2 x 6,3 x 11,2
H1 Maxibox	12 V	–	–	**1 987 301 112**	–	3 165141 248593	5,3 x 9,0 x 11,3
H4 Maxibox	12 V	–	–	**1 987 301 111**	–	3 165141 248586	5,3 x 9,0 x 11,3
H7 Maxibox	12 V	–	–	**1 987 301 113**	–	3 165141 248609	5,3 x 9,0 x 11,3
H1/H7 Maxibox	12 V	–	–	**1 987 301 120**	–	3 165141 334333	5,3 x 9,0 x 11,3

* Doppelschachtel – geeignet für SB und WS
* Double carton – Suitable for workshop and self-service packaging
* Boîte de deux – Pour emballage atelier et libre-service
* Confezione doppia – Adatto per confezioni da officina e self-service
* Caja doble – Adecuado para talleres y envase de autoservicio

de
Glühlampen-Programm
aufsteigend nach ECE

en
Bulbs program
ECE in ascending order

fr
Gamme lampes
Classement par ordre ECE

it
Programma di lampadine
Ordinato per ECE

es
Programa de làmparas
Clasificación alfabetica por ECE

ECE		U / V	P / W			
C ...						
C5W	Pure Light	12 V	5 W	SV8,5-8	**1 987 302 211**	**1 987 301 004**
C5W	Longlife Daytime	12 V	5 W	SV8,5-8	**1 987 302 281**	**1 987 301 060**
C5W	Trucklight	24 V	5 W	SV8,5-8	**1 987 302 507**	**–**
C21W	Pure Light	12 V	21 W	SV8,5-8	**1 987 302 230**	**–**
D ...						
D1S	Xenon	–	35 W	PK32d-2	**1 987 302 905**	**–**
D2R	Xenon	–	35 W	P32d-3	**1 987 302 903**	**–**
D2S	Xenon	–	35 W	P32d-2	**1 987 302 904**	**–**
H1 ...						
H1	Pure Light	12 V	55 W	P14,5s	**1 987 302 011**	**1 987 301 005**
H1	Plus 30	12 V	55 W	P14,5s	**1 987 302 012**	**1 987 301 003**
H1	Plus 50	12 V	55 W	P14,5s	**1 987 302 019**	**1 987 301 041**
H1	Plus 50 Plus Life	12 V	55 W	P14,5s	**1 987 301 071 ***	**1 987 301 064**
H1	Plus 90	12 V	55 W	P14,5s	**1 987 301 073 ***	**1 987 301 076**
H1	Longlife Daytime	12 V	55 W	P14,5s	**1 987 302 018**	**1 987 301 051**
H1	Xenon Blue	12 V	55 W	P14,5s	**1 987 302 015**	**1 987 301 011**
H1	Xenon Silver	12 V	55 W	P14,5s	**1 987 301 080 ***	**1 987 301 067**
H1	Trucklight	24 V	70 W	P14,5s	**1 987 302 411**	**–**
H1	Trucklight +100	24 V	70 W	P14,5s	**1 987 302 711**	**–**
H2 ...						
H2	Pure Light	12 V	55 W	X511	**1 987 302 022**	**–**
H2	Trucklight	24 V	70 W	X511	**1 987 302 422**	**–**
H3 ...						
H3	Pure Light	12 V	55 W	PK22s	**1 987 302 031**	**1 987 301 006**
H3	Longlife Daytime	12 V	55 W	PK22s	**1 987 302 038**	**1 987 301 053**
H3	Xenon Blue	12 V	55 W	PK22s	**1 987 302 035**	**1 987 301 007**
H3	Trucklight	24 V	70 W	PK22s	**1 987 302 431**	**–**
H3	Trucklight +100	24 V	70 W	PK22s	**1 987 302 731**	**–**
H4 ...						
H4	Pure Light	12 V	60/55 W	P43t	**1 987 302 041**	**1 987 301 001**
H4	Pure Light Heavy Duty	12 V	60/55 W	P43t	**1 987 302 047**	**–**
H4	Plus 30	12 V	60/55 W	P43t	**1 987 302 042**	**1 987 301 002**
H4	Plus 60	12 V	60/55 W	P43t	**1 987 302 049**	**1 987 301 040**
H4	Plus 60 Plus Life	12 V	60/55 W	P43t	**1 987 301 070 ***	**1 987 301 065**
H4	Plus 90	12 V	60/55 W	P43t	**1 987 301 074 ***	**1 987 301 077**
H4	Longlife Daytime	12 V	60/55 W	P43t	**1 987 302 048**	**1 987 301 054**
H4	Xenon Blue	12 V	60/55 W	P43t	**1 987 302 045**	**1 987 301 010**
H4	Xenon Silver	12 V	60/55 W	P43t	**1 987 301 081 ***	**1 987 301 068**
H4	Trucklight	24 V	75/70 W	P43t	**1 987 302 441**	**–**
H4	Trucklight +100	24 V	75/70 W	P43t	**1 987 302 741**	**–**
H4	Trucklight Heavy Duty	24 V	75/70 W	P43t	**1 987 302 442**	**–**

* Doppelschachtel – geeignet für SB und WS
* Double carton – Suitable for workshop and self-service packaging
* Boîte de deux – Pour emballage atelier et libre-service
* Confezione doppia – Adatto per confezioni da officina e self-service
* Caja doble – Adecuado para talleres y envase de autoservicio

de
Glühlampen-Programm
aufsteigend nach ECE (Fortsetzung)

en
Bulbs program
ECE in ascending order (continued)

fr
Gamme lampes
Classement par ordre ECE (suite)

it
Programma di lampadina
Ordinato per ECE (seguito)

es
Programa de làmparas
Clasificación alfabetica por ECE (continuación)

ECE		$\frac{U}{V}$	$\frac{P}{W}$			

H6 ...

H6W	Pure Light	12 V	6 W	BAX9s	**1 987 302 232**	**1 987 301 035**
H6W	Longlife Daytime	12 V	6 W	BAX9s	**–**	**1 987 301 061**

H7 ...

H7	Pure Light	12 V	55 W	PX26d	**1 987 302 071**	**1 987 301 012**
H7	Plus 50	12 V	55 W	PX26d	**1 987 302 079**	**1 987 301 042**
H7	Plus 50 Plus Life	12 V	55 W	PX26d	**1 987 301 072 ***	**1 987 301 066**
H7	Plus 90	12 V	55 W	PX26d	**1 987 301 075 ***	**1 987 301 078**
H7	Longlife Daytime	12 V	55 W	PX26d	**1 987 302 078**	**1 987 301 057**
H7	Xenon Blue	12 V	55 W	PX26d	**1 987 302 075**	**1 987 301 013**
H7	Xenon Silver	12 V	55 W	PX26d	**1 987 301 087 ***	**1 987 301 069**
H7	Trucklight	24 V	70 W	PX26d	**1 987 302 471**	**–**
H7	Trucklight +100	24 V	70 W	PX26d	**1 987 302 771**	**–**

H8 ...

H8	Pure Light	12 V	35 W	PGJ19-1	**1 987 302 081**	**–**

H9 ...

H9	Pure Light	12 V	65 W	PGJ19-5	**1 987 302 082**	**–**

H10 ...

H10	Pure Light	12 V	42 W	PY20d	**1 987 302 083**	**–**

H11 ...

H11	Pure Light	12 V	55 W	PGJ19-2	**1 987 302 084**	**–**
H11	Trucklight +100	24 V	70 W	PGJ19-2	**1 987 302 784**	**–**

HB ...

HB3	Pure Light	12 V	60 W	P20d	**1 987 302 152**	**1 987 301 062**
HB3	Xenon Blue	12 V	60 W	P20d	**1 987 302 154**	**–**
HB4	Pure Light	12 V	51 W	P22d	**1 987 302 153**	**1 987 301 063**
HB4	Xenon Blue	12 V	51 W	P22d	**1 987 302 155**	**–**

P ...

P21W	Pure Light	12 V	21 W	BA15s	**1 987 302 201**	**1 987 301 017**
P21W	Longlife Daytime	12 V	21 W	BA15s	**1 987 302 280**	**1 987 301 050**
P21W	Trucklight	12 V	21 W	BA15s	**1 987 302 501**	**–**
P21W	Trucklight Heavy Duty	24 V	21 W	BA15s	**1 987 302 503**	**–**
P21W	Pure Light	6 V	21 W	BA15s	**1 987 302 607**	**–**
P21/4W	Pure Light	12 V	21/4 W	BAZ15d	**1 987 302 215**	**1 987 301 015**
P21/5W	Pure Light	12 V	21/5 W	BAY15d	**1 987 302 202**	**1 987 301 016**
P21/5W	Longlife Daytime	12 V	21/5 W	BAY15d	**1 987 302 282**	**1 987 301 055**
P21/5W	Trucklight	24 V	21/5 W	BAY15d	**1 987 302 524**	**–**
P21/5W	Pure Light	6 V	21/5 W	BAY15d	**1 987 302 609**	**–**
PY21W	Pure Light	12 V	21 W	BAU15s	**1 987 302 213**	**1 987 301 018**
PY21W	Magic Effect		21 W	BAU15s	**–**	**1 987 301 025**
PY21W	Trucklight Heavy Duty		21 W	BAU15s	**1 987 302 502**	**–**

ECE		U V	P W			
R ...						
R2	Pure Light	12 V	45/40 W	P45t	**1 987 302 023**	**1 987 301 020**
R2	Trucklight	24 V	55/50 W	P45t	**1 987 302 421**	**–**
R2	Pure Light	6 V	45/40 W	P45t	**1 987 302 614**	**–**
R2 Halogen	Pure Light	12 V	45/40 W	P45t	**1 987 302 021**	**1 987 301 021**
R5W	Pure Light	12 V	5 W	BA15s	**1 987 302 204**	**1 987 301 022**
R5W	Pure Light	12 V	5 W	BA15d	**1 987 302 237**	**–**
R5W	Pure Light	6 V	5 W	BA15s	**1 987 302 605**	**–**
R5W	Longlife Daytime	12 V	5 W	BA15s	**1 987 302 284**	**1 987 301 058**
R5W	Trucklight	24 V	5 W	BA15s	**1 987 302 510**	**–**
R5W	Trucklight Heavy Duty	24 V	5 W	BA15s	**1 987 302 511**	**–**
R5W	Trucklight	24 V	5 W	BA15d	**1 987 302 527**	**–**
R10W	Pure Light	12 V	10 W	BA15s	**1 987 302 203**	**1 987 301 019**
R10W	Longlife Daytime	12 V	10 W	BA15s	**1 987 302 283**	**1 987 301 059**
R10W	Trucklight	24 V	10 W	BA15s	**1 987 302 505**	**–**
R10W	Trucklight Heavy Duty	24 V	10 W	BA15s	**1 987 302 506**	**–**
R10W	Pure Light	6 V	10 W	BA15s	**1 987 302 604**	**–**
S ...						
S3	Pure Light	6 V	15 W	P26s	**1 987 302 606**	**–**
T ...						
T4W	Pure Light	12 V	4 W	BA9s	**1 987 302 207**	**1 987 301 023**
T4W	Longlife Daytime	12 V	4 W	BA9s	**1 987 302 287**	**1 987 301 056**
T4W	Xenon Blue	12 V	4 W	BA9s	**–**	**1 987 301 034**
T4W	Trucklight	24 V	4 W	BA9s	**1 987 302 512**	**–**
T4W	Trucklight Heavy Duty	24 V	4 W	BA9s	**1 987 302 525**	**–**
T4W	Pure Light	6 V	4 W	BA9s	**1 987 302 603**	**–**
W ...						
W2,3W	Pure Light	12 V	2,3 W	W2x4,6d	**1 987 302 240**	**–**
W3W	Pure Light	12 V	3 W	W2,1x9,5d	**1 987 302 217**	**1 987 301 028**
W3W	Trucklight	24 V	3 W	W2,1x9,5d	**1 987 302 517**	**–**
W5W	Pure Light	12 V	5 W	W2,1x9,5d	**1 987 302 206**	**1 987 301 026**
W5W	Longlife Daytime	12 V	5 W	W2,1x9,5d	**1 987 302 286**	**1 987 301 052**
W5W	Xenon Blue	12 V	5 W	W2,1x9,5d	**–**	**1 987 301 033**
W5W	Trucklight	24 V	5 W	W2,1x9,5d	**1 987 302 518**	**–**
W16W	Pure Light	12 V	16 W	W2,1x9,5d	**1 987 302 205**	**–**
W21W	Pure Light	12 V	21 W	W3x16d	**1 987 302 251**	**–**
W21/5W	Pure Light	12 V	21/5 W	W3x16q	**1 987 302 252**	**–**
WY5W	Pure Light	12 V	5 W	W2,1x9,5d	**1 987 302 241**	**–**

de
Glühlampen-Programm
aufsteigend nach ECE
(Fortsetzung)

en
Bulbs program
ECE in ascending order
(continued)

fr
Gamme lampes
Classement par ordre ECE
(suite)

it
Programma di lampadina
Ordinato per ECE
(seguito)

es
Programa de làmparas
Clasificación alfabetica por ECE
(continuación)

ECE		$\frac{U}{V}$	$\frac{P}{W}$			
– ...						
–	Pure Light	12 V	1,1 W	BX8,4d	**1 987 302 243**	**–**
–	Pure Light	12 V	1,2 W	W2x4,6d	**1 987 302 208**	**1 987 301 024**
–	Pure Light	12 V	1,2 W	B8,5d	**1 987 302 219**	**–**
–	Pure Light	12 V	1,2 W	B8,3d	**1 987 302 220**	**–**
–	Pure Light	12 V	1,2 W	BX8,4d	**1 987 302 235**	**–**
–	Pure Light	12 V	1,3 W	BX8,4d	**1 987 302 254**	**–**
–	Pure Light	12 V	1,5 W	BX8,4d	**1 987 302 255**	**–**
–	Pure Light	12 V	1,5 W	B8,5d	**1 987 302 256**	**–**
–	Pure Light	12 V	2 W	BA9s	**1 987 302 212**	**–**
–	Pure Light	12 V	2 W	W2x4,6d	**1 987 302 218**	**–**
–	Pure Light	12 V	2 W	B8,5d	**1 987 302 221**	**–**
–	Pure Light	12 V	2 W	W2,1x9,5d	**1 987 302 223**	**–**
–	Pure Light	12 V	2 W	BA7s	**1 987 302 224**	**–**
–	Pure Light	12 V	2 W	BX8,4d	**1 987 302 236**	**–**
–	Pure Light	12 V	2 W	B8,3d	**1 987 302 244**	**–**
–	Pure Light	12 V	20 W	BA9s	**1 987 302 245**	**–**
–	Pure Light	12 V	3 W	SV7-8	**1 987 302 226**	**–**
–	Pure Light	12 V	3 W	BA9s	**1 987 302 248**	**–**
–	Pure Light	12 V	5 W	SV8,5-8	**1 987 302 225**	**–**
–	Pure Light	12 V	5 W	BA9s	**1 987 302 231**	**–**
–	Pure Light	12 V	10 W	SV8,5-8	**1 987 302 210**	**1 987 301 014**
–	Pure Light	12 V	10 W	SV8,5-8	**1 987 302 227**	**–**
–	Pure Light	12 V	10 W	SV8,5-8	**1 987 302 228**	**–**
–	Pure Light	12 V	10 W	BA9s	**1 987 302 233**	**–**
–	Pure Light	12 V	15 W	SV8,5-8	**1 987 302 238**	**–**
–	Pure Light	12 V	18 W	BA15s	**1 987 302 214**	**–**
–	Pure Light	12 V	18 W	SV8,5-8	**1 987 302 229**	**–**
–	Rallye	12 V	100 W	P14,5s	**1 987 302 016**	**–**
–	Rallye	12 V	100 W	PK22s	**1 987 302 036**	**–**
–	Rallye	12 V	100/80 W	P43t	**1 987 302 046**	**–**
–	Trucklight	24 V	1,2 W	W2x4,6d	**1 987 302 504**	**–**
–	Trucklight	24 V	1,2 W	B8,5d	**1 987 302 514**	**–**
–	Trucklight	24 V	1,2 W	B8,3d	**1 987 302 515**	**–**
–	Trucklight	24 V	2 W	BA9s	**1 987 302 508**	**–**
–	Trucklight	24 V	2 W	W2,1x9,5d	**1 987 302 516**	**–**
–	Trucklight	24 V	3 W	BA7s	**1 987 302 519**	**–**
–	Trucklight	24 V	3 W	SV7-8	**1 987 302 528**	**–**
–	Trucklight	24 V	5 W	SV8,5-8	**1 987 302 520**	**–**
–	Trucklight	24 V	10 W	SV8,5-8	**1 987 302 521**	**–**
–	Trucklight	24 V	18 W	BA15s	**1 987 302 523**	**–**
–	Trucklight	24 V	15 W	BA15s	**1 987 302 526**	**–**
–	Pure Light	6 V	0,6 W	E10	**1 987 302 601**	**–**
–	Pure Light	6 V	2,4 W	EP10	**1 987 302 602**	**–**
–	Pure Light	6 V	10 W	SV8,5-8	**1 987 302 612**	**–**
–	Pure Light	6 V	2 W	BA9s	**1 987 302 613**	**–**

de **Verwendungsteil**

en **Applications**

fr **Affectations**

it **Impiego**

es **Aplicación**

Benutzerhinweise

In diesem Katalog sind die Daten von Fahrzeugen, Motoren und Geräten für den europäischen Markt von Baujahr 1987 bis einschließlich 2007 erfasst. Diese wurden aus Hersteller- und Importeurangaben, aus Fahrzeuguntersuchungen sowie aus Unterlagen von Bosch nach bestem Wissen sorgfältig zusammengestellt und geben den Stand zum Zeitpunkt der Drucklegung wieder.

Zwangsläufige Abweichungen durch länderspezifische technische Änderungen können nie ganz ausgeschlossen werden. Bosch kann daher insoweit nicht für die Vollständigkeit und Fehlerfreiheit der Daten haften. Für Irrtümer und Druckfehler, die zu Schäden am Eigentum oder Vermögen führen, haftet Bosch nur bei grob fahrlässiger Pflichtverletzung und bei Vorsatz für unmittelbare Schäden. Bei Personenschäden haftet Bosch auch bei leichter Fahrlässigkeit.

Notes for users

This catalog contains the data from the vehicles, engines, and equipment for the European market from year of manufacture 1987 up to and including the year 2007. This data has been assembled from information provided by manufacturers and importers, and taken from Bosch documentation, as well as from investigations made on vehicles. It has been compiled to the best of our knowledge and belief, and reflects the status at the date of going to print.

It is impossible to avoid deviations caused by technical changes resulting from the conditions and regulations applying in a particular country. Bosch can therefore accept no liability for the completeness and faultlessness of the data. In case of mistakes and misprints which result in damage to property or assets, Bosch is only liable for immediate damages insofar as a gross breach of duty or wrongful intent apply. If personal injury is involved, Bosch is liable also in case of ordinary negligence.

A l'attention de l'utilisateur

Le présent catalogue mentionne les données spécifiques de véhicules, moteurs et appareils pour le marché européen depuis l'année de fabrication 1987 jusqu'au millésime 2007 inclus. Ces informations ont été rassemblées soigneusement et en toute impartialité à partir des indications des constructeurs et importateurs, des contrôles techniques des véhicules et de la documentation Bosch, et matérialisent le stade des connaissances au moment de la mise sous presse.

Il n'est jamais possible d'exclure totalement les divergences éventuelles dues aux modifications techniques, spécifiques des différents pays considérés. En aucun cas, Bosch n'engage sa responsabilité en ce qui concerne l'intégralité et l'exactitude des données. En ce qui concerne les erreurs et les fautes d'impression, qui peuvent entraîner des dommages à la propriété ou à la fortune, Bosch n'engage sa responsabilité pour les dommages directs qu'en cas d'atteinte et de négligence graves et intentionnelles envers ses obligations. En cas de dommages causés aux personnes, Bosch engage sa responsabilité aussi en cas de légère négligence.

Avvertenze per la consultazione

Nella seguente parte di catalogo sono contemplati veicoli, motori ed apparecchi a partire dall'anno di costruzione 1987 fino all'anno 2007. Tali informazioni sono state rilevate dalle documentazioni di Case Auto, Importatori, da verifiche eseguite sui veicoli, così come da documentazione Bosch.

Eventuali discordanze dovute a specifiche esigenze del Paese e variazioni tecniche non possono essere previste. Per questo Bosch non si assume alcuna responsabilità per mancanze ed eventuali errori riferite ai dati. Per danni a cose o danni patrimoniali, dovuti ad errori o refusi di stampa, Bosch è responsabile solo in caso di dolo o colpa grave. Per danni alla persona, Bosch è responsabile anche in caso di colpa meno grave.

Avertencia al usuario

Los datos de este catálogo para vehículos, motores y utensilios del mercado europeo comprenden los años de construcción desde 1987 hasta 2007 inclusive. Éstos son creados para la edición indicada sobre la base de documentos de Bosch, exámenes o inspecciones de vehículos así como datos de fabricantes e importadores.

No obstante, y debido al cuantioso material de información, no se puede excluir la posibilidad de modificaciones, diferencias propias de variantes específicas de los países, fallos, equivocaciones o errores. En caso de inexactitudes y errores de imprenta, la responsabilidad de Bosch se limita al daño inmediato, con exclusión de un daño puramente patrimonial, a no ser que el daño previsible y típico del contrato sea de mayor monto o se debe a dolo o culpa intencional o a negligencia grave.

de

Hinweise zur Benutzung

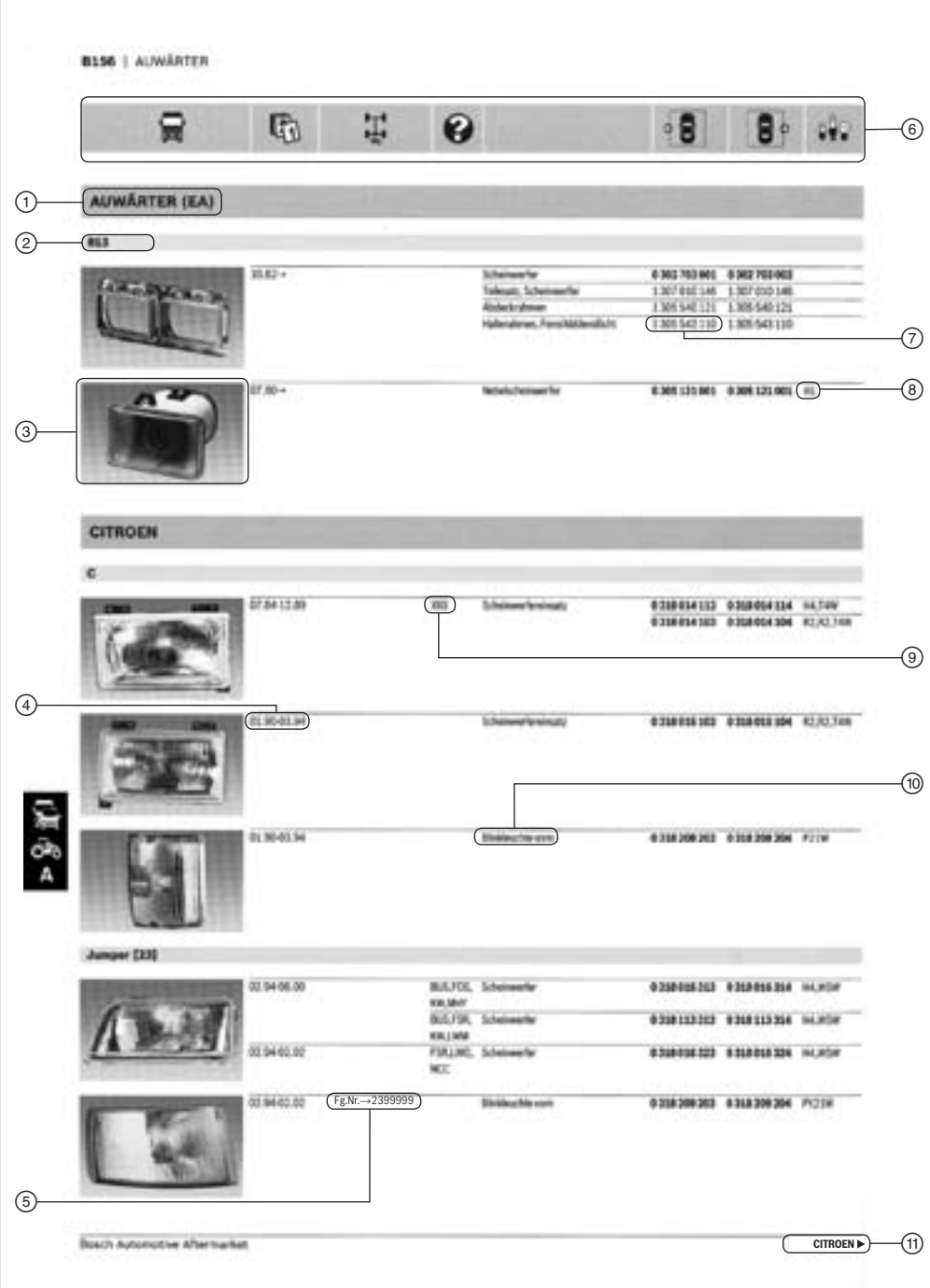

① **Fahrzeugmarke**
Hervorhebung der Hersteller

② **Fahrzeugmodell**
Alphanumerisch aufsteigend

③ **Abbildung**

④ **Einbauzeitraum**

⑤ **Fahrgestellnummer**

⑥ **Bildzeichen-Erläuterung**
Siehe Katalogende

⑦ **Bestellnummer**
10-stellige Bestellnummer

⑧ **Glühlampen-Typ**
10-stellige Bestellnummer

⑨ **Sonderfall**
Erläuterung siehe Katalogende

⑩ **Ersatzteile**

⑪ **Hinweis**
Fortsetzung nächste Seite

en

How to use this catalogue

① **Vehicle make**
Manufacturer recommendation

② **Vehicle model**
Alphanumeric, in ascending order

③ **Figure**

④ **Installation period**

⑤ **Chassis number**

⑥ **Explanation of symbols**
See end of catalog

⑦ **Part number**
10-digit part number

⑧ **Type of bulb**
10-digit part number

⑨ **Specia case**
For explanation see end of catalog

⑩ **Spare parts**

⑪ **Note**
Continued on next page

fr

Consignes d'utilisation

① **Marque du véhicule**
Indication des constructeurs

② **Modèle de véhicule**
Ordre alphanumérique croissant

③ **Figure**

④ **Période de montage**

⑤ **Numéro de châssis**

⑥ **Explication des symboles**
Voir la fin du catalogue

⑦ **Référence**
Référence à 10 chiffres

⑧ **Type d'ampoule**
Référence à 10 chiffres

⑨ **Cas particulier**
Explication, voir la fin du catalogue

⑩ **Pièces de rechange**

⑪ **Remarque**
Suite au verso

it

Istruzioni d'uso

① **Marca del veicolo**
Evidenziazione della casa costruttrice

② **Modello veicolo**
In ordine alfanumerico crescente

③ **Illustrazione**

④ **Periodo di montaggio**

⑤ **Numero del telaio**

⑥ **Legenda dei simboli**
Vedere legenda a fine catalogo

⑦ **Codice di ordinazione**
Codice di ordinazione a 10 cifre

⑧ **Tipo di lampadina**
Codice di ordinazione a 10 cifre

⑨ **Casi specifici**
Vedere legenda a fine catalogo

⑩ **Ricambi**

⑪ **Nota**
Continua alla pagina seguente

es

Indicaciones para la utilización

① **Marca del vehículo**
Fabricantes recomendados

② **Modelo de vehículo**
Alfanumérico ascendente

③ **Ilustración**

④ **Peridodo de montaje**

⑤ **Número de bastidor**

⑥ **Explicación de los símbolos gráficos**
Ver fin del catálogo

⑦ **Referencia de pedido**
Referencia de pedido de 10 dígitos

⑧ **Tipo de lámpara**
Referencia de pedido de 10 dígitos

⑨ **Caso especial**
Para una explicación, ver el fin del catálogo

⑩ **Piezas de recambio**

⑪ **Indicación**
Continúa en la siguiente página

AUWÄRTER (EA)

813



10.82→		Headlamp	**0 302 703 001**	**0 302 703 002**	
		Parts set, headlamp	1 307 010 146	1 307 010 146	
		Outer rim	1 305 540 121	1 305 540 121	
		Frame, main/dipped beam	1 305 543 110	1 305 543 110	



07.90→		Fog lamp	**0 305 121 001**	**0 305 121 001**	H1

CITROEN

C



07.84-12.89	XXX	Headlamp unit	**0 318 014 113**	**0 318 014 114**	H4,T4W
			0 318 014 103	**0 318 014 104**	R2,R2,T4W



01.90-03.94		Headlamp unit	**0 318 015 103**	**0 318 015 104**	R2,R2,T4W



01.90-03.94		Turn signal lamp, front	**0 318 208 203**	**0 318 208 204**	P21W

Jumper [23]



02.94-08.00	BUS,FOS, KW,MHY	Headlamp	**0 318 016 313**	**0 318 016 314**	H4,W5W
	BUS,FSR, KW,LWM	Headlamp	**0 318 113 313**	**0 318 113 314**	H4,W5W
02.94-02.02	FSR,LWO, NCC	Headlamp	**0 318 016 323**	**0 318 016 324**	H4,W5W



02.94-02.02		Turn signal lamp, front	**0 318 209 203**	**0 318 209 204**	PY21W

	02.94-02.02			Fog lamp	**0 318 412 003**	**0 318 412 004**	H3

DAF

55

	11.95-12.97	XXX		Headlamp	**0 318 074 113**	**0 318 074 114**	H4

FENDT

Farmer

200

	10.74-10.89			Headlamp	**0 301 203 001**	**0 301 203 001**	R2,R2,T4W

305/306/308

	02.80-12.92			Headlight, symmetrical	**0 301 204 002**	**0 301 204 002**	R2,R2
				Outer rim	1 305 540 097	1 305 540 097	
	01.93-02.95			Headlight, symmetrical	**0 301 204 100**	**0 301 204 100**	H4
				Outer rim	1 305 540 097	1 305 540 097	

FIAT

Ducato Maxi 17/20 [251..]

	06.06→		LWM	Headlamp	**0 318 134 313**	**0 318 134 314**	H7,H1,W5W, PY21W

◀ FIAT

Ducato 10 [230../234..]

	03.94-03.02	FOS,MHY, NCC	Headlamp	**0 318 016 313**	**0 318 016 314**	H4,W5W
		FSR,LWO, NCC	Headlamp	**0 318 016 323**	**0 318 016 324**	H4,W5W
	09.00-03.02	LWM,NOR	Headlamp	**0 318 113 313**	**0 318 113 314**	H4,W5W
	03.94-03.02		Turn signal lamp, front	**0 318 209 203**	**0 318 209 204**	PY21W
	03.94-03.02		Fog lamp	**0 318 412 003**	**0 318 412 004**	H3
	03.94-03.02	KW	Tail lamp	**0 319 333 203**	**0 319 333 204**	P21/4W, PY21W,P21/ 4W,P21W, P21W
	03.94-03.02	KW	Tail lamp, glass	**0 319 333 243**	**0 319 333 244**	

Ducato 10 [279..]

	07.90-02.94		Headlamp unit	**0 318 015 103**	**0 318 015 104**	R2,R2,T4W
	07.90-02.94		Turn signal lamp, front	**0 318 208 203**	**0 318 208 204**	P21W
	07.90-02.94	RNL	Tail lamp	**0 318 311 003**	**0 318 311 004**	R5W,P21W, P21W,P21W

Ducato 10 [280..]

	06.85-06.90	XXX	Headlamp unit	**0 318 014 113**	**0 318 014 114**	H4,T4W
				0 318 014 103	**0 318 014 104**	R2,R2,T4W
	06.88-06.90	RNL	Tail lamp	**0 318 311 003**	**0 318 311 004**	R5W,P21W, P21W,P21W

Ducato 11 [243../247..]

	04.02-08.06	LWO	Headlamp	**0 318 113 213**	**0 318 113 214**	H7,H1,W5W, PY21W

Ducato 11 [250..]

	06.06→	LWM	Headlamp	**0 318 134 313**	**0 318 134 314**	H7,H1,W5W, PY21W

Ducato 12 [284..]

	07.90-02.94		Headlamp unit	**0 318 015 103**	**0 318 015 104**	R2,R2,T4W
	07.90-02.94		Turn signal lamp, front	**0 318 208 203**	**0 318 208 204**	P21W
	07.90-02.94	RNL	Tail lamp	**0 318 311 003**	**0 318 311 004**	R5W,P21W, P21W,P21W

◀ FIAT

Ducato 14 [231../234..]

	03.94-03.02	FOS,MHY, NCC	Headlamp	**0 318 016 313**	**0 318 016 314**	H4,W5W
		FSR,LWO, NCC	Headlamp	**0 318 016 323**	**0 318 016 324**	H4,W5W
	09.00-03.02	LWM,NOR	Headlamp	**0 318 113 313**	**0 318 113 314**	H4,W5W
	03.94-03.02		Turn signal lamp, front	**0 318 209 203**	**0 318 209 204**	PY21W
	03.94-03.02		Fog lamp	**0 318 412 003**	**0 318 412 004**	H3
	03.94-03.02	KW	Tail lamp	**0 319 333 203**	**0 319 333 204**	P21/4W, PY21W,P21/ 4W,P21W, P21W
	03.94-03.02	KW	Tail lamp, glass	**0 319 333 243**	**0 319 333 244**	

Ducato 14 [280..]

	07.90-02.94		Headlamp unit	**0 318 015 103**	**0 318 015 104**	R2,R2,T4W
	07.90-02.94		Turn signal lamp, front	**0 318 208 203**	**0 318 208 204**	P21W
	07.90-02.94	RNL	Tail lamp	**0 318 311 003**	**0 318 311 004**	R5W,P21W, P21W,P21W

Ducato 15 [244..]

	04.02-08.06	LWO	Headlamp	**0 318 113 213**	**0 318 113 214**	H7,H1,W5W, PY21W
	04.02-08.06		Fog lamp	**0 318 490 119**	**0 318 490 119**	H1
	04.02-03.06		Tail lamp	**0 319 333 213**	**0 319 333 214**	P21/5W, PY21W,P21/ 5W,P21W, P21W

Ducato 15 [247..]

	04.02-08.06	LWO	Headlamp	**0 318 113 213**	**0 318 113 214**	H7,H1,W5W, PY21W

Ducato 15/17 [250..]

	06.06→	LWM	Headlamp	**0 318 134 313**	**0 318 134 314**	H7,H1,W5W, PY21W

Ducato 18 [232../234..]

	03.94-03.02	FOS,MHY, NCC	Headlamp	**0 318 016 313**	**0 318 016 314**	H4,W5W
		FSR,LWO, NCC	Headlamp	**0 318 016 323**	**0 318 016 324**	H4,W5W
	09.00-03.02	LWM,NOR	Headlamp	**0 318 113 313**	**0 318 113 314**	H4,W5W
	03.94-03.02		Turn signal lamp, front	**0 318 209 203**	**0 318 209 204**	PY21W

◀ FIAT

	03.94-03.02			Fog lamp	**0 318 412 003**	**0 318 412 004**	H3
	03.94-03.02		KW	Tail lamp	**0 319 333 203**	**0 319 333 204**	P21/4W, PY21W,P21/ 4W,P21W, P21W
	03.94-03.02		KW	Tail lamp, glass	**0 319 333 243**	**0 319 333 244**	
Ducato 18 [245../247..]							
	04.02-08.06		LWO	Headlamp	**0 318 113 213**	**0 318 113 214**	H7,H1,W5W, PY21W
Ducato 18 [282..]							
	07.90-02.94			Headlamp unit	**0 318 015 103**	**0 318 015 104**	R2,R2,T4W
	07.90-02.94			Turn signal lamp, front	**0 318 208 203**	**0 318 208 204**	P21W
	07.90-02.94		RNL	Tail lamp	**0 318 311 003**	**0 318 311 004**	R5W,P21W, P21W,P21W
Talento							
	03.88-12.94		XXX	Headlamp unit	**0 318 014 113**	**0 318 014 114**	H4,T4W
					0 318 014 103	**0 318 014 104**	R2,R2,T4W

	03.88-12.94			Turn signal lamp, front	**0 318 208 203**	**0 318 208 204**	P21W
	03.88-12.94		CTO,RNL	Tail lamp	**0 318 311 003**	**0 318 311 004**	R5W,P21W, P21W,P21W

FORD

Transit [E_ _]

	08.91-11.96		XXX	Headlight range control motor	**0 307 851 316**	**0 307 851 316**	
	08.91-08.00		XXX	Fog lamp	**0 318 490 039**	**0 318 490 039**	H3

Transit [T_ _]

	01.86-07.91			Headlight range control motor	**0 307 851 302**	**0 307 851 302**	
	01.86-07.91		XXX	Fog lamp	**0 318 490 039**	**0 318 490 039**	H3

Transit Euroline/Nugget/Tourneo [E_ _]

	08.94-11.96		XXX	Headlight range control motor	**0 307 851 316**	**0 307 851 316**	
	08.94-08.00		XXX	Fog lamp	**0 318 490 039**	**0 318 490 039**	H3

F

FORD NEW HOLLAND

Serie 8000

8060/8070/8080



11.86-11.01		Rear fog light	**0 313 103 006**	**0 313 103 006**	P21W

GAZ

Sobol



09.97→	XXX	Headlamp		**0 301 306 142**	H4,T4W

HAMM

GRW

10



05.77-05.92		Headlamp	**0 301 201 002**	**0 301 201 002**	R2,R2,T4W
		Lens (headlamp)	1 305 601 120	1 305 601 120	
		Seal, frame	1 300 212 017	1 300 212 017	
		Outer rim	1 305 501 150	1 305 501 150	

ISUZU

ELF



01.77-10.88	OS	Headlamp unit, main beam	**0 301 303 034**	**0 301 303 034**	H1
		Headlamp unit, dipped beam	**0 301 302 101**	**0 301 302 101**	H4

IVECO

Daily

	05.99-08.06		Headlamp	**0 301 160 203**	**0 301 160 204**	H7,H1,W5W
			Headlight range control motor	0 307 853 303	0 307 853 303	
	04.06→	LWM	Headlamp	**0 318 136 213**	**0 318 136 214**	H7,H1,W5W, PY21W,H1
	09.04-03.06	TW	Turn signal lamp, front	**0 318 249 203**	**0 318 249 204**	PY21W
	05.99-08.06		Headlight range control motor	**0 307 853 303**	**0 307 853 303**	

Daily, Grinta

	02.85-05.99	LWO	Headlamp	**0 318 057 313**	**0 318 057 314**	H4,T4W
		OWR	Headlamp	**0 318 057 113**	**0 318 057 114**	H4,T4W
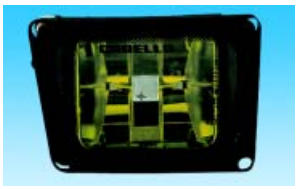	06.89-05.99	SWW	Fog lamp	**0 318 424 003**	**0 318 424 004**	H3

EuroCargo

	09.91-12.91		Headlamp	**0 301 008 106**	**0 301 008 106**	H4,T4W
			Headlamp unit	1 305 320 860	1 305 320 860	
			Outer rim	1 305 540 023	1 305 540 023	
			Headlamp	**0 301 008 020**	**0 301 008 020**	R2,R2,T4W
			Headlamp unit	1 305 320 866	1 305 320 866	
			Outer rim	1 305 540 023	1 305 540 023	

◀ IVECO

	01.91-08.03	TW	Headlamp	**0 301 017 333**	**0 301 017 334**		
			Headlamp unit	1 305 365 927	1 305 365 927		
			Lens (headlamp)	1 305 620 987	1 305 620 987		
			Seal, lamp	2 301 014 134	2 301 014 134		
				1 301 014 203	1 301 014 203		
			Seal, frame	1 301 014 226	1 301 014 226		
			Frame, main/dipped beam	1 305 544 018			
			Headlight range control motor	0 307 851 306	0 307 851 306		
	01.91-12.00	OWR	Headlamp	**0 318 054 115**	**0 318 054 116**	H4,T4W	
	11.00-11.00	LWM	Headlamp	**0 318 054 315**	**0 318 054 316**	H4,T4W	
		LWO	Headlamp	**0 318 054 317**	**0 318 054 318**	H4,T4W	
	01.91-12.00	XXX	Turn signal lamp, front	**0 318 226 205**	**0 318 226 206**	P21W	

EuroStar

	01.93-12.02	LWM	Headlamp	**0 318 055 313**	**0 318 055 314**	H4,T4W,H3	
		OWR	Headlamp	**0 318 055 113**	**0 318 055 114**	H4,T4W,H3	
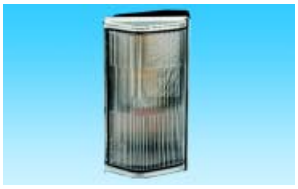	01.93-12.02	EUS	Turn signal lamp, front	**0 318 227 203**	**0 318 227 204**	PY21W	

EuroTech

	04.92-08.03	TW	Headlamp	**0 301 017 333**	**0 301 017 334**		
			Headlamp unit	1 305 365 927	1 305 365 927		
			Lens (headlamp)	1 305 620 987	1 305 620 987		
			Seal, lamp	2 301 014 134	2 301 014 134		
				1 301 014 203	1 301 014 203		
			Seal, frame	1 301 014 226	1 301 014 226		
			Frame, main/dipped beam	1 305 544 018			
			Headlight range control motor	0 307 851 306	0 307 851 306		
	01.93-12.02	LWM	Headlamp	**0 318 055 313**	**0 318 055 314**	H4,T4W,H3	
		OWR	Headlamp	**0 318 055 113**	**0 318 055 114**	H4,T4W,H3	
	01.99-12.02	LWO	Headlamp	**0 318 055 315**	**0 318 055 316**	H4,T4W,H3	

	01.93-12.00		EUS	Turn signal lamp, front	**0 318 227 203**	**0 318 227 204**	PY21W
	01.93-12.02			Turn signal lamp, front	**0 318 227 213**	**0 318 227 214**	PY21W
EuroTrakker							
	04.92-08.04		TW	Headlamp	**0 301 017 333**	**0 301 017 334**	
				Headlamp unit	1 305 365 927	1 305 365 927	
				Lens (headlamp)	1 305 620 987	1 305 620 987	
				Seal, lamp	2 301 014 134	2 301 014 134	
					1 301 014 203	1 301 014 203	
				Seal, frame	1 301 014 226	1 301 014 226	
				Frame, main/dipped beam	1 305 544 018		
				Headlight range control motor	0 307 851 306	0 307 851 306	
	01.93-12.00		LWM	Headlamp	**0 318 055 313**	**0 318 055 314**	H4,T4W,H3
			OWR	Headlamp	**0 318 055 113**	**0 318 055 114**	H4,T4W,H3
	01.99-12.00		LWO	Headlamp	**0 318 055 315**	**0 318 055 316**	H4,T4W,H3
	01.93-12.00			Turn signal lamp, front	**0 318 227 213**	**0 318 227 214**	PY21W
Stralis							
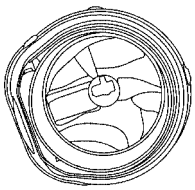	08.03→		TW	Fog lamp	**0 318 442 009**	**0 318 442 009**	H1
	08.03→		TW	Driving lamp	**0 318 504 009**	**0 318 504 009**	H1
TurboStar							
	07.84-12.91			Headlamp	**0 301 008 106**	**0 301 008 106**	H4,T4W
				Headlamp unit	1 305 320 860	1 305 320 860	
				Outer rim	1 305 540 023	1 305 540 023	
				Headlamp	**0 301 008 020**	**0 301 008 020**	R2,R2,T4W
				Headlamp unit	1 305 320 866	1 305 320 866	
				Outer rim	1 305 540 023	1 305 540 023	
	07.84-12.00		ABM,XXX	Headlight range control	**0 307 550 934**	**0 307 550 934**	

◀ IVECO

TurboTech



01.83-12.91		Headlamp	**0 301 008 106**	**0 301 008 106**	H4,T4W
		Headlamp unit	1 305 320 860	1 305 320 860	
		Outer rim	1 305 540 023	1 305 540 023	
		Headlamp	**0 301 008 020**	**0 301 008 020**	R2,R2,T4W
		Headlamp unit	1 305 320 866	1 305 320 866	
		Outer rim	1 305 540 023	1 305 540 023	
03.80-08.95	SAT	Headlight range control	**0 307 550 909**	**0 307 550 909**	

110/115/120/130/135/145/150/160/170



01.83-12.91		Headlamp	**0 301 008 106**	**0 301 008 106**	H4,T4W
		Headlamp unit	1 305 320 860	1 305 320 860	
		Outer rim	1 305 540 023	1 305 540 023	
		Headlamp	**0 301 008 020**	**0 301 008 020**	R2,R2,T4W
		Headlamp unit	1 305 320 866	1 305 320 866	
		Outer rim	1 305 540 023	1 305 540 023	

175



09.86-12.91		Headlamp	**0 301 008 106**	**0 301 008 106**	H4,T4W
		Headlamp unit	1 305 320 860	1 305 320 860	
		Outer rim	1 305 540 023	1 305 540 023	
		Headlamp	**0 301 008 020**	**0 301 008 020**	R2,R2,T4W
		Headlamp unit	1 305 320 866	1 305 320 866	
		Outer rim	1 305 540 023	1 305 540 023	



09.86-07.92	LWO	Headlamp	**0 301 017 321**	**0 301 017 322**	H4,T4W
		Headlamp unit	1 305 363 945	1 305 363 945	
		Lens (headlamp)	1 305 620 596	1 305 620 596	
		Seal, lamp	1 301 014 203	1 301 014 203	

190/240/260



01.83-12.91		Headlamp	**0 301 008 106**	**0 301 008 106**	H4,T4W
		Headlamp unit	1 305 320 860	1 305 320 860	
		Outer rim	1 305 540 023	1 305 540 023	
		Headlamp	**0 301 008 020**	**0 301 008 020**	R2,R2,T4W
		Headlamp unit	1 305 320 866	1 305 320 866	
		Outer rim	1 305 540 023	1 305 540 023	
07.80-09.97	SAT	Headlight range control	**0 307 550 909**	**0 307 550 909**	

300/315/316/320/330



01.83-12.91		Headlamp	**0 301 008 106**	**0 301 008 106**	H4,T4W
		Headlamp unit	1 305 320 860	1 305 320 860	
		Outer rim	1 305 540 023	1 305 540 023	
		Headlamp	**0 301 008 020**	**0 301 008 020**	R2,R2,T4W
		Headlamp unit	1 305 320 866	1 305 320 866	
		Outer rim	1 305 540 023	1 305 540 023	

370



01.87-12.91		Headlamp	**0 301 008 106**	**0 301 008 106**	H4,T4W
		Headlamp unit	1 305 320 860	1 305 320 860	
		Outer rim	1 305 540 023	1 305 540 023	
		Headlamp	**0 301 008 020**	**0 301 008 020**	R2,R2,T4W
		Headlamp unit	1 305 320 866	1 305 320 866	
		Outer rim	1 305 540 023	1 305 540 023	



01.87-11.98		Headlamp	**0 301 017 118**	**0 301 017 118**	H4,T4W
		Headlamp unit	1 305 365 913	1 305 365 913	
		Lens (headlamp)	1 305 620 468	1 305 620 468	
		Seal, lamp	1 301 014 203	1 301 014 203	
		Frame, main/dipped beam	1 305 544 018	1 305 544 018	

471/480/571/580/671/680



02.85-11.98		Headlamp	**0 301 017 102**	**0 301 017 102**	H4,T4W
		Headlamp unit	1 305 365 913	1 305 365 913	
		Lens (headlamp)	1 305 620 468	1 305 620 468	
		Seal, lamp	1 301 014 203	1 301 014 203	
			2 301 014 134	2 301 014 134	
		Seal, frame	1 301 014 226	1 301 014 226	
		Frame, main/dipped beam	1 305 544 018	1 305 544 018	

KAMAZ

11t



01.00→		Headlamp unit, dipped beam	**0 301 709 102**	**0 301 709 101**	H4,T4W

KÄSSBOHRER

Setra



09.91→		Headlamp	**0 301 011 015**	**0 301 011 016**	H1,H1,W5W
		Reflector, dipped beam	1 305 363 980	1 305 363 980	
		Lens (headlamp)	1 305 621 979	1 305 621 980	
		Seal, lamp	1 301 014 227	1 301 014 227	
		Reflector, main beam	1 305 321 800	1 305 321 800	



06.79-06.96		Headlamp	**0 301 011 101**	**0 301 011 102**	H4,T4W
		Headlamp unit	1 305 320 844	1 305 320 844	
		Lens (headlamp)	1 305 620 367	1 305 620 368	
		Seal	1 301 015 097	1 301 015 097	
	HG,XXX	Headlamp outer rim	**1 305 543 905**	**1 305 543 905**	

KATO

KR

45H



06.86-06.01		Headlamp	**0 301 017 102**	**0 301 017 102**	H4,T4W
		Headlamp unit	1 305 365 913	1 305 365 913	
		Lens (headlamp)	1 305 620 468	1 305 620 468	
		Seal, lamp	1 301 014 203	1 301 014 203	
			2 301 014 134	2 301 014 134	
		Seal, frame	1 301 014 226	1 301 014 226	
		Frame, main/dipped beam	1 305 544 018	1 305 544 018	
		Headlamp	**0 301 017 003**	**0 301 017 003**	R2,R2,T4W
		Headlamp unit	1 305 365 912	1 305 365 912	
		Lens (headlamp)	1 305 620 467	1 305 620 467	
		Seal, lamp	1 301 014 203	1 301 014 203	
			2 301 014 134	2 301 014 134	
		Seal, frame	1 301 014 226	1 301 014 226	
		Frame, main/dipped beam	1 305 544 018	1 305 544 018	

MAN

EL



04.94-05.99	LWO	Headlamp	**0 301 017 304**	**0 301 017 304**	H4,T4W
		Headlamp unit	1 305 365 927	1 305 365 927	
		Lens (headlamp)	1 305 620 468	1 305 620 468	
		Seal, lamp	1 301 014 203	1 301 014 203	
			2 301 014 134	2 301 014 134	
		Seal, frame	1 301 014 226	1 301 014 226	



04.94-06.97		Fog lamp	**0 305 406 001**	**0 305 406 001**	H3

FRH



05.85-12.92		Headlamp	**0 301 608 120**	**0 301 608 120**	H4,T4W
	XXX	Driving lamp	**0 301 608 050**	**0 301 608 050**	H1

Lion´s City/Comfort



07.98→	TW	Fog lamp	**0 305 406 001**	**0 305 406 001**	H3

NG

	04.94-11.99	LWO	Headlamp	**0 301 017 304**	**0 301 017 304**	H4,T4W
			Headlamp unit	1 305 365 927	1 305 365 927	
			Lens (headlamp)	1 305 620 468	1 305 620 468	
			Seal, lamp	1 301 014 203	1 301 014 203	
				2 301 014 134	2 301 014 134	
			Seal, frame	1 301 014 226	1 301 014 226	
	04.94-11.99		Fog lamp	**0 305 406 001**	**0 305 406 001**	H3

NL

	09.89-03.91		Headlamp	**0 301 017 003**	**0 301 017 003**	R2,R2,T4W
			Headlamp unit	1 305 365 912	1 305 365 912	
			Lens (headlamp)	1 305 620 467	1 305 620 467	
			Seal, lamp	1 301 014 203	1 301 014 203	
				2 301 014 134	2 301 014 134	
			Seal, frame	1 301 014 226	1 301 014 226	
			Frame, main/dipped beam	1 305 544 018	1 305 544 018	
	04.90-04.93	H4O	Headlamp	**0 301 017 303**	**0 301 017 303**	H4,T4W
			Headlamp unit	1 305 365 913	1 305 365 913	
			Lens (headlamp)	1 305 620 468	1 305 620 468	
			Seal, lamp	1 301 014 203	1 301 014 203	
				2 301 014 134	2 301 014 134	
			Seal, frame	1 301 014 226	1 301 014 226	
			Frame, main/dipped beam	1 305 544 018	1 305 544 018	
	08.92-11.99	LWO	Headlamp	**0 301 017 304**	**0 301 017 304**	H4,T4W
			Headlamp unit	1 305 365 927	1 305 365 927	
			Lens (headlamp)	1 305 620 468	1 305 620 468	
			Seal, lamp	1 301 014 203	1 301 014 203	
				2 301 014 134	2 301 014 134	
			Seal, frame	1 301 014 226	1 301 014 226	
	08.92-12.01		Fog lamp	**0 305 406 001**	**0 305 406 001**	H3

NÜ

	09.96→		Fog lamp	**0 305 406 001**	**0 305 406 001**	H3

◀ MAN

R



03.86-01.93		Headlamp	**0 301 608 120**	**0 301 608 120**	H4,T4W
	XXX	Driving lamp	**0 301 608 050**	**0 301 608 050**	H1

SD/SG



11.84-04.94	Headlamp	**0 301 017 303**	**0 301 017 303**	H4,T4W
	Headlamp unit	1 305 365 913	1 305 365 913	
	Lens (headlamp)	1 305 620 468	1 305 620 468	
	Seal, lamp	1 301 014 203	1 301 014 203	
		2 301 014 134	2 301 014 134	
	Seal, frame	1 301 014 226	1 301 014 226	
	Frame, main/dipped beam	1 305 544 018	1 305 544 018	



11.84-04.87	Headlamp	**0 301 611 101**	**0 301 611 101**	H4,T4W
		0 301 611 002	**0 301 611 002**	R2,R2,T4W

SL



06.83-04.87	Headlamp	**0 301 611 101**	**0 301 611 101**	H4,T4W
		0 301 611 002	**0 301 611 002**	R2,R2,T4W

SL II



06.84-04.94	Headlamp	**0 301 017 303**	**0 301 017 303**	H4,T4W
	Headlamp unit	1 305 365 913	1 305 365 913	
	Lens (headlamp)	1 305 620 468	1 305 620 468	
	Seal, lamp	1 301 014 203	1 301 014 203	
		2 301 014 134	2 301 014 134	
	Seal, frame	1 301 014 226	1 301 014 226	
	Frame, main/dipped beam	1 305 544 018	1 305 544 018	
09.89-03.94	Headlamp	**0 301 017 003**	**0 301 017 003**	R2,R2,T4W
	Headlamp unit	1 305 365 912	1 305 365 912	
	Lens (headlamp)	1 305 620 467	1 305 620 467	
	Seal, lamp	1 301 014 203	1 301 014 203	
		2 301 014 134	2 301 014 134	
	Seal, frame	1 301 014 226	1 301 014 226	
	Frame, main/dipped beam	1 305 544 018	1 305 544 018	

SM



11.87-02.95	LWO	Headlamp	**0 301 017 304**	**0 301 017 304**	H4,T4W
		Headlamp unit	1 305 365 927	1 305 365 927	
		Lens (headlamp)	1 305 620 468	1 305 620 468	
		Seal, lamp	1 301 014 203	1 301 014 203	
			2 301 014 134	2 301 014 134	
		Seal, frame	1 301 014 226	1 301 014 226	

SÜ



01.87-04.93		Headlamp	**0 301 017 003**	**0 301 017 003**	R2,R2,T4W
		Headlamp unit	1 305 365 912	1 305 365 912	
		Lens (headlamp)	1 305 620 467	1 305 620 467	
		Seal, lamp	1 301 014 203	1 301 014 203	
			2 301 014 134	2 301 014 134	
		Seal, frame	1 301 014 226	1 301 014 226	
		Frame, main/dipped beam	1 305 544 018	1 305 544 018	



01.86-04.87		Headlamp	**0 301 611 101**	**0 301 611 101**	H4,T4W
			0 301 611 002	**0 301 611 002**	R2,R2,T4W

6t/8t/9t/10t



09.87-05.95	OWR	Headlamp	**0 301 017 121**	**0 301 017 122**	H4,T4W
		Headlamp unit	1 305 365 927	1 305 365 927	
		Lens (headlamp)	1 305 620 987	1 305 620 987	
		Seal, lamp	2 301 014 134	2 301 014 134	
			1 301 014 203	1 301 014 203	
		Seal, frame	1 301 014 226	1 301 014 226	
		Frame, main/dipped beam		1 305 544 018	



02.93-05.95		Headlamp	**0 301 608 120**	**0 301 608 120**	H4,T4W

8t/10t/11t [Bus]



09.87-09.96	OWR	Headlamp	**0 301 017 121**	**0 301 017 122**	H4,T4W
		Headlamp unit	1 305 365 927	1 305 365 927	
		Lens (headlamp)	1 305 620 987	1 305 620 987	
		Seal, lamp	2 301 014 134	2 301 014 134	
			1 301 014 203	1 301 014 203	
		Seal, frame	1 301 014 226	1 301 014 226	
		Frame, main/dipped beam		1 305 544 018	

8t/9t/10t [L2000/L2000 Evol.]



10.93-12.05	MEL	Headlamp	**0 301 017 339**	**0 301 017 339**	H4,T4W
		Headlamp unit	1 305 365 927	1 305 365 927	
		Lens (headlamp)	1 305 620 987	1 305 620 987	
		Seal, lamp	1 301 014 203	1 301 014 203	
			2 301 014 134	2 301 014 134	
		Seal, frame	1 301 014 226	1 301 014 226	
		Headlight range control motor	0 307 851 356	0 307 851 356	
	OWR	Headlamp	**0 301 017 319**	**0 301 017 319**	H4,T4W
		Headlamp unit	1 305 365 927	1 305 365 927	
		Lens (headlamp)	1 305 620 987	1 305 620 987	
		Seal, lamp	1 301 014 203	1 301 014 203	
			2 301 014 134	2 301 014 134	
		Seal, frame	1 301 014 226	1 301 014 226	

◀ MAN

12t/14t

	04.83-02.89		Headlamp	**0 301 017 303**	**0 301 017 303**	H4,T4W
			Headlamp unit	1 305 365 913	1 305 365 913	
			Lens (headlamp)	1 305 620 468	1 305 620 468	
			Seal, lamp	1 301 014 203	1 301 014 203	
				2 301 014 134	2 301 014 134	
			Seal, frame	1 301 014 226	1 301 014 226	
			Frame, main/dipped beam	1 305 544 018	1 305 544 018	
	08.88-01.95	LWO,OWR	Headlamp	**0 301 017 304**	**0 301 017 304**	H4,T4W
			Headlamp unit	1 305 365 927	1 305 365 927	
			Lens (headlamp)	1 305 620 468	1 305 620 468	
			Seal, lamp	1 301 014 203	1 301 014 203	
				2 301 014 134	2 301 014 134	
			Seal, frame	1 301 014 226	1 301 014 226	
	02.95-06.97	MEL	Headlamp	**0 301 017 339**	**0 301 017 339**	H4,T4W
			Headlamp unit	1 305 365 927	1 305 365 927	
			Lens (headlamp)	1 305 620 987	1 305 620 987	
			Seal, lamp	1 301 014 203	1 301 014 203	
				2 301 014 134	2 301 014 134	
			Seal, frame	1 301 014 226	1 301 014 226	
			Headlight range control motor	0 307 851 356	0 307 851 356	
		OWR	Headlamp	**0 301 017 319**	**0 301 017 319**	H4,T4W
			Headlamp unit	1 305 365 927	1 305 365 927	
			Lens (headlamp)	1 305 620 987	1 305 620 987	
			Seal, lamp	1 301 014 203	1 301 014 203	
				2 301 014 134	2 301 014 134	
			Seal, frame	1 301 014 226	1 301 014 226	
	07.89-06.97		Fog lamp	**0 305 001 004**	**0 305 001 004**	H3
	09.92-06.97	NOP	Driving lamp	**0 306 001 201**	**0 306 001 201**	H3
	04.83-02.89		Rear fog light	**0 313 103 006**	**0 313 103 006**	

12t/14t [L2000/L2000 Evol./M2000/M2000L Evol./M2000M/M2000M Evol.]

	08.95-09.06	FSS,MEL	Headlamp	**0 301 017 339**	**0 301 017 339**	H4,T4W
			Headlamp unit	1 305 365 927	1 305 365 927	
			Lens (headlamp)	1 305 620 987	1 305 620 987	
			Seal, lamp	1 301 014 203	1 301 014 203	
				2 301 014 134	2 301 014 134	
			Seal, frame	1 301 014 226	1 301 014 226	
			Headlight range control motor	0 307 851 356	0 307 851 356	



08.95-09.06	FSS,OWR	Headlamp	**0 301 017 319**	**0 301 017 319**	H4,T4W
		Headlamp unit	1 305 365 927	1 305 365 927	
		Lens (headlamp)	1 305 620 987	1 305 620 987	
		Seal, lamp	1 301 014 203	1 301 014 203	
			2 301 014 134	2 301 014 134	
		Seal, frame	1 301 014 226	1 301 014 226	

15t



01.81-07.88		Headlamp	**0 301 017 303**	**0 301 017 303**	H4,T4W
		Headlamp unit	1 305 365 913	1 305 365 913	
		Lens (headlamp)	1 305 620 468	1 305 620 468	
		Seal, lamp	1 301 014 203	1 301 014 203	
			2 301 014 134	2 301 014 134	
		Seal, frame	1 301 014 226	1 301 014 226	
		Frame, main/dipped beam	1 305 544 018	1 305 544 018	
08.88-02.89	LWO	Headlamp	**0 301 017 304**	**0 301 017 304**	H4,T4W
		Headlamp unit	1 305 365 927	1 305 365 927	
		Lens (headlamp)	1 305 620 468	1 305 620 468	
		Seal, lamp	1 301 014 203	1 301 014 203	
			2 301 014 134	2 301 014 134	
		Seal, frame	1 301 014 226	1 301 014 226	



11.76-02.89		Reversing lamp	**0 314 106 001**	**0 314 106 001**	

15t [L2000/M2000L/M2000L Evol.]



08.95→	FSS,MEL	Headlamp	**0 301 017 339**	**0 301 017 339**	H4,T4W
		Headlamp unit	1 305 365 927	1 305 365 927	
		Lens (headlamp)	1 305 620 987	1 305 620 987	
		Seal, lamp	1 301 014 203	1 301 014 203	
			2 301 014 134	2 301 014 134	
		Seal, frame	1 301 014 226	1 301 014 226	
		Headlight range control motor	0 307 851 356	0 307 851 356	
	FSS,OWR	Headlamp	**0 301 017 319**	**0 301 017 319**	H4,T4W
		Headlamp unit	1 305 365 927	1 305 365 927	
		Lens (headlamp)	1 305 620 987	1 305 620 987	
		Seal, lamp	1 301 014 203	1 301 014 203	
			2 301 014 134	2 301 014 134	
		Seal, frame	1 301 014 226	1 301 014 226	

16t/16t [Bus]



03.81-07.88		Headlamp	**0 301 017 303**	**0 301 017 303**	H4,T4W
		Headlamp unit	1 305 365 913	1 305 365 913	
		Lens (headlamp)	1 305 620 468	1 305 620 468	
		Seal, lamp	1 301 014 203	1 301 014 203	
			2 301 014 134	2 301 014 134	
		Seal, frame	1 301 014 226	1 301 014 226	
		Frame, main/dipped beam	1 305 544 018	1 305 544 018	

◀ MAN

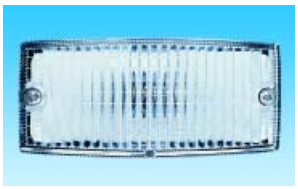

03.81-06.89		Reversing lamp	**0 314 106 001**	**0 314 106 001**		

17t/18t



11.86-07.88		Headlamp	**0 301 017 303**	**0 301 017 303**	H4,T4W
		Headlamp unit	1 305 365 913	1 305 365 913	
		Lens (headlamp)	1 305 620 468	1 305 620 468	
		Seal, lamp	1 301 014 203	1 301 014 203	
			2 301 014 134	2 301 014 134	
		Seal, frame	1 301 014 226	1 301 014 226	
		Frame, main/dipped beam	1 305 544 018	1 305 544 018	
08.88-02.93	LWO	Headlamp	**0 301 017 304**	**0 301 017 304**	H4,T4W
		Headlamp unit	1 305 365 927	1 305 365 927	
		Lens (headlamp)	1 305 620 468	1 305 620 468	
		Seal, lamp	1 301 014 203	1 301 014 203	
			2 301 014 134	2 301 014 134	
		Seal, frame	1 301 014 226	1 301 014 226	
08.88-01.95	LWO,OWR	Headlamp	**0 301 017 304**	**0 301 017 304**	H4,T4W
		Headlamp unit	1 305 365 927	1 305 365 927	
		Lens (headlamp)	1 305 620 468	1 305 620 468	
		Seal, lamp	1 301 014 203	1 301 014 203	
			2 301 014 134	2 301 014 134	
		Seal, frame	1 301 014 226	1 301 014 226	
03.91-06.96	MEL	Headlamp	**0 301 017 339**	**0 301 017 339**	H4,T4W
		Headlamp unit	1 305 365 927	1 305 365 927	
		Lens (headlamp)	1 305 620 987	1 305 620 987	
		Seal, lamp	1 301 014 203	1 301 014 203	
			2 301 014 134	2 301 014 134	
		Seal, frame	1 301 014 226	1 301 014 226	
		Headlight range control motor	0 307 851 356	0 307 851 356	
03.93-06.96	OWR	Headlamp	**0 301 017 319**	**0 301 017 319**	H4,T4W
		Headlamp unit	1 305 365 927	1 305 365 927	
		Lens (headlamp)	1 305 620 987	1 305 620 987	
		Seal, lamp	1 301 014 203	1 301 014 203	
			2 301 014 134	2 301 014 134	
		Seal, frame	1 301 014 226	1 301 014 226	



07.89-06.96		Fog lamp	**0 305 001 004**	**0 305 001 004**	H3



09.92-06.96	NOP	Driving lamp	**0 306 001 201**	**0 306 001 201**	H3

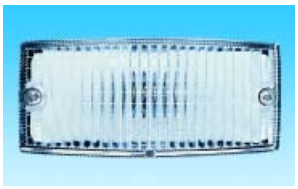	11.86-05.90		Reversing lamp	**0 314 106 001**	**0 314 106 001**	
	11.86-05.90		Rear fog light	**0 313 103 006**	**0 313 103 006**	
18t [Bus]						
	09.96→	FSS,MEL	Headlamp	**0 301 017 339**	**0 301 017 339**	H4,T4W
			Headlamp unit	1 305 365 927	1 305 365 927	
			Lens (headlamp)	1 305 620 987	1 305 620 987	
			Seal, lamp	1 301 014 203	1 301 014 203	
				2 301 014 134	2 301 014 134	
			Seal, frame	1 301 014 226	1 301 014 226	
			Headlight range control motor	0 307 851 356	0 307 851 356	
		FSS,OWR	Headlamp	**0 301 017 319**	**0 301 017 319**	H4,T4W
			Headlamp unit	1 305 365 927	1 305 365 927	
			Lens (headlamp)	1 305 620 987	1 305 620 987	
			Seal, lamp	1 301 014 203	1 301 014 203	
				2 301 014 134	2 301 014 134	
			Seal, frame	1 301 014 226	1 301 014 226	
18t [L2000/M2000/M2000L/M2000L Evol./M2000M/M2000M Evol.]						
	08.95→	FSS,MEL	Headlamp	**0 301 017 339**	**0 301 017 339**	H4,T4W
			Headlamp unit	1 305 365 927	1 305 365 927	
			Lens (headlamp)	1 305 620 987	1 305 620 987	
			Seal, lamp	1 301 014 203	1 301 014 203	
				2 301 014 134	2 301 014 134	
			Seal, frame	1 301 014 226	1 301 014 226	
			Headlight range control motor	0 307 851 356	0 307 851 356	
		FSS,OWR	Headlamp	**0 301 017 319**	**0 301 017 319**	H4,T4W
			Headlamp unit	1 305 365 927	1 305 365 927	
			Lens (headlamp)	1 305 620 987	1 305 620 987	
			Seal, lamp	1 301 014 203	1 301 014 203	
				2 301 014 134	2 301 014 134	
			Seal, frame	1 301 014 226	1 301 014 226	
19t						
	12.84-07.89		Headlamp	**0 301 017 303**	**0 301 017 303**	H4,T4W
			Headlamp unit	1 305 365 913	1 305 365 913	
			Lens (headlamp)	1 305 620 468	1 305 620 468	
			Seal, lamp	1 301 014 203	1 301 014 203	
				2 301 014 134	2 301 014 134	
			Seal, frame	1 301 014 226	1 301 014 226	
			Frame, main/dipped beam	1 305 544 018	1 305 544 018	

◀ MAN

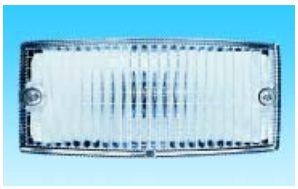	05.77-01.88		Reversing lamp	**0 314 106 001**	**0 314 106 001**	
	01.83-07.89		Rear fog light	**0 313 103 006**	**0 313 103 006**	

19t [E2000/E2000 Evol./F2000/F2000 Evol.]

	01.94-12.01	FSS,MEL	Headlamp	**0 301 017 339**	**0 301 017 339**	H4,T4W
			Headlamp unit	1 305 365 927	1 305 365 927	
			Lens (headlamp)	1 305 620 987	1 305 620 987	
			Seal, lamp	1 301 014 203	1 301 014 203	
				2 301 014 134	2 301 014 134	
			Seal, frame	1 301 014 226	1 301 014 226	
			Headlight range control motor	0 307 851 356	0 307 851 356	
		FSS,OWR	Headlamp	**0 301 017 319**	**0 301 017 319**	H4,T4W
			Headlamp unit	1 305 365 927	1 305 365 927	
			Lens (headlamp)	1 305 620 987	1 305 620 987	
			Seal, lamp	1 301 014 203	1 301 014 203	
				2 301 014 134	2 301 014 134	
			Seal, frame	1 301 014 226	1 301 014 226	
	01.94-12.01	1ST,FSS	Fog lamp	**0 305 001 004**	**0 305 001 004**	H3
	01.94-12.01	3ST,FSS	Driving lamp	**0 306 001 201**	**0 306 001 201**	H3

19t [F/U 90]

	07.86-06.96	LWO	Headlamp	**0 301 017 304**	**0 301 017 304**	H4,T4W
			Headlamp unit	1 305 365 927	1 305 365 927	
			Lens (headlamp)	1 305 620 468	1 305 620 468	
			Seal, lamp	1 301 014 203	1 301 014 203	
				2 301 014 134	2 301 014 134	
			Seal, frame	1 301 014 226	1 301 014 226	
	07.86-06.96		Headlamp housing assembly	**0 302 300 003**		

20t/22t



01.81-07.88		Headlamp	**0 301 017 303**	**0 301 017 303**	H4,T4W
		Headlamp unit	1 305 365 913	1 305 365 913	
		Lens (headlamp)	1 305 620 468	1 305 620 468	
		Seal, lamp	1 301 014 203	1 301 014 203	
			2 301 014 134	2 301 014 134	
		Seal, frame	1 301 014 226	1 301 014 226	
		Frame, main/dipped beam	1 305 544 018	1 305 544 018	
08.88-06.90	LWO	Headlamp	**0 301 017 304**	**0 301 017 304**	H4,T4W
		Headlamp unit	1 305 365 927	1 305 365 927	
		Lens (headlamp)	1 305 620 468	1 305 620 468	
		Seal, lamp	1 301 014 203	1 301 014 203	
			2 301 014 134	2 301 014 134	
		Seal, frame	1 301 014 226	1 301 014 226	



05.78-06.90	EVH	Headlamp housing assembly	**0 302 300 005**	**0 302 300 006**	

20t [L2000/M2000L/M2000L Evol.]



10.97-09.06	FSS,MEL	Headlamp	**0 301 017 339**	**0 301 017 339**	H4,T4W
		Headlamp unit	1 305 365 927	1 305 365 927	
		Lens (headlamp)	1 305 620 987	1 305 620 987	
		Seal, lamp	1 301 014 203	1 301 014 203	
			2 301 014 134	2 301 014 134	
		Seal, frame	1 301 014 226	1 301 014 226	
		Headlight range control motor	0 307 851 356	0 307 851 356	
	FSS,OWR	Headlamp	**0 301 017 319**	**0 301 017 319**	H4,T4W
		Headlamp unit	1 305 365 927	1 305 365 927	
		Lens (headlamp)	1 305 620 987	1 305 620 987	
		Seal, lamp	1 301 014 203	1 301 014 203	
			2 301 014 134	2 301 014 134	
		Seal, frame	1 301 014 226	1 301 014 226	

23t/24t [F2000]



02.96-12.02	FSS,MEL	Headlamp	**0 301 017 339**	**0 301 017 339**	H4,T4W
		Headlamp unit	1 305 365 927	1 305 365 927	
		Lens (headlamp)	1 305 620 987	1 305 620 987	
		Seal, lamp	1 301 014 203	1 301 014 203	
			2 301 014 134	2 301 014 134	
		Seal, frame	1 301 014 226	1 301 014 226	
		Headlight range control motor	0 307 851 356	0 307 851 356	
03.96-12.02	FSS,OWR	Headlamp	**0 301 017 319**	**0 301 017 319**	H4,T4W
		Headlamp unit	1 305 365 927	1 305 365 927	
		Lens (headlamp)	1 305 620 987	1 305 620 987	
		Seal, lamp	1 301 014 203	1 301 014 203	
			2 301 014 134	2 301 014 134	
		Seal, frame	1 301 014 226	1 301 014 226	



02.96-12.02	1ST	Fog lamp	**0 305 001 004**	**0 305 001 004**	H3
03.96-01.00	FSS	Fog lamp	**0 305 001 004**	**0 305 001 004**	H3

◀ MAN

	08.96-12.02		FSS	Driving lamp	**0 306 001 201**	**0 306 001 201**	H3
24t							
	11.86-07.89			Headlamp	**0 301 017 303**	**0 301 017 303**	H4,T4W
				Headlamp unit	1 305 365 913	1 305 365 913	
				Lens (headlamp)	1 305 620 468	1 305 620 468	
				Seal, lamp	1 301 014 203	1 301 014 203	
					2 301 014 134	2 301 014 134	
				Seal, frame	1 301 014 226	1 301 014 226	
				Frame, main/dipped beam	1 305 544 018	1 305 544 018	
	11.86-08.88		EVH	Headlamp housing assembly	**0 302 300 005**	**0 302 300 006**	
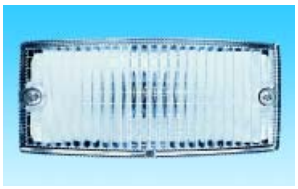	11.86-12.90			Reversing lamp	**0 314 106 001**	**0 314 106 001**	
	11.86-12.90			Rear fog light	**0 313 103 006**	**0 313 103 006**	
24t [F/M/U 90]							
	10.86-02.90		LWO	Headlamp	**0 301 017 304**	**0 301 017 304**	H4,T4W
				Headlamp unit	1 305 365 927	1 305 365 927	
				Lens (headlamp)	1 305 620 468	1 305 620 468	
				Seal, lamp	1 301 014 203	1 301 014 203	
					2 301 014 134	2 301 014 134	
				Seal, frame	1 301 014 226	1 301 014 226	
	07.89-01.95		LWO,OWR	Headlamp	**0 301 017 304**	**0 301 017 304**	H4,T4W
				Headlamp unit	1 305 365 927	1 305 365 927	
				Lens (headlamp)	1 305 620 468	1 305 620 468	
				Seal, lamp	1 301 014 203	1 301 014 203	
					2 301 014 134	2 301 014 134	
				Seal, frame	1 301 014 226	1 301 014 226	
	02.95-06.96		MEL	Headlamp	**0 301 017 339**	**0 301 017 339**	H4,T4W
				Headlamp unit	1 305 365 927	1 305 365 927	
				Lens (headlamp)	1 305 620 987	1 305 620 987	
				Seal, lamp	1 301 014 203	1 301 014 203	
					2 301 014 134	2 301 014 134	
				Seal, frame	1 301 014 226	1 301 014 226	
				Headlight range control motor	0 307 851 356	0 307 851 356	

	10.86-02.90	OWR	Headlamp	**0 301 017 319**	**0 301 017 319**	H4,T4W
			Headlamp unit	1 305 365 927	1 305 365 927	
			Lens (headlamp)	1 305 620 987	1 305 620 987	
			Seal, lamp	1 301 014 203	1 301 014 203	
				2 301 014 134	2 301 014 134	
			Seal, frame	1 301 014 226	1 301 014 226	
	07.89-06.96		Fog lamp	**0 305 001 004**	**0 305 001 004**	H3
	09.92-06.96	NOP	Driving lamp	**0 306 001 201**	**0 306 001 201**	H3
25t [M2000/M2000M/M2000M Evol.]						
	08.95→	FSS,MEL	Headlamp	**0 301 017 339**	**0 301 017 339**	H4,T4W
			Headlamp unit	1 305 365 927	1 305 365 927	
			Lens (headlamp)	1 305 620 987	1 305 620 987	
			Seal, lamp	1 301 014 203	1 301 014 203	
				2 301 014 134	2 301 014 134	
			Seal, frame	1 301 014 226	1 301 014 226	
			Headlight range control motor	0 307 851 356	0 307 851 356	
		FSS,OWR	Headlamp	**0 301 017 319**	**0 301 017 319**	H4,T4W
			Headlamp unit	1 305 365 927	1 305 365 927	
			Lens (headlamp)	1 305 620 987	1 305 620 987	
			Seal, lamp	1 301 014 203	1 301 014 203	
				2 301 014 134	2 301 014 134	
			Seal, frame	1 301 014 226	1 301 014 226	
26t/30t/32t/33t/40t/41t/48t						
	01.81-06.02		Headlamp	**0 301 017 303**	**0 301 017 303**	H4,T4W
			Headlamp unit	1 305 365 913	1 305 365 913	
			Lens (headlamp)	1 305 620 468	1 305 620 468	
			Seal, lamp	1 301 014 203	1 301 014 203	
				2 301 014 134	2 301 014 134	
			Seal, frame	1 301 014 226	1 301 014 226	
			Frame, main/dipped beam	1 305 544 018	1 305 544 018	
	02.80-02.89	EVH	Headlamp housing assembly	**0 302 300 005**	**0 302 300 006**	
	01.77-08.88		Reversing lamp	**0 314 106 001**	**0 314 106 001**	

◀ MAN

	01.83-02.89		Rear fog light	**0 313 103 006**	**0 313 103 006**	

26t/27t/28t/30t/32t/33t/35t/40t/41t/42t/50t [E2000/E2000 Evol./F2000/F2000 Evol./M2000/M2000L]

	09.96-06.02	FSS,MEL	Headlamp	**0 301 017 339**	**0 301 017 339**	H4,T4W
			Headlamp unit	1 305 365 927	1 305 365 927	
			Lens (headlamp)	1 305 620 987	1 305 620 987	
			Seal, lamp	1 301 014 203	1 301 014 203	
				2 301 014 134	2 301 014 134	
			Seal, frame	1 301 014 226	1 301 014 226	
			Headlight range control motor	0 307 851 356	0 307 851 356	
		FSS,OWR	Headlamp	**0 301 017 319**	**0 301 017 319**	H4,T4W
			Headlamp unit	1 305 365 927	1 305 365 927	
			Lens (headlamp)	1 305 620 987	1 305 620 987	
			Seal, lamp	1 301 014 203	1 301 014 203	
				2 301 014 134	2 301 014 134	
			Seal, frame	1 301 014 226	1 301 014 226	
	09.96-06.02	1ST,FSS	Fog lamp	**0 305 001 004**	**0 305 001 004**	H3
	09.96-05.97	3ST,FSS	Driving lamp	**0 306 001 201**	**0 306 001 201**	H3

26t/32t/33t/35t [F 90]

	09.87-04.95	LWO	Headlamp	**0 301 017 304**	**0 301 017 304**	H4,T4W
			Headlamp unit	1 305 365 927	1 305 365 927	
			Lens (headlamp)	1 305 620 468	1 305 620 468	
			Seal, lamp	1 301 014 203	1 301 014 203	
				2 301 014 134	2 301 014 134	
			Seal, frame	1 301 014 226	1 301 014 226	

MERCEDES-BENZ

Actros [SKN]

	09.96-09.03		Headlamp	**0 301 081 119**	**0 301 081 120**	H4,T4W, P21W
			Headlamp unit	1 305 321 867	1 305 321 868	
			Lens (lamp)	1 315 630 085	1 315 630 086	
		GRF	Headlamp	**0 301 081 117**	**0 301 081 118**	H4,T4W
			Headlamp unit	1 305 321 875	1 305 321 876	
		GRF,LWR	Headlamp	**0 301 081 317**	**0 301 081 318**	H4,T4W
			Headlamp unit	1 305 321 875	1 305 321 876	
			Headlight range control motor	0 307 852 328	0 307 852 328	

	09.96-09.03		LWR	Headlamp	**0 301 081 321**	**0 301 081 322**	H4,T4W, P21W
				Headlamp unit	1 305 321 867	1 305 321 868	
				Lens (lamp)	1 315 630 085	1 315 630 086	
				Headlight range control motor	0 307 852 328	0 307 852 328	
			LWR,MIN	Headlamp	**0 301 081 319**	**0 301 081 320**	H4,T4W,H1
				Headlamp unit	1 305 321 871	1 305 321 872	
				Headlight range control motor	0 307 852 328	0 307 852 328	
			MIN	Headlamp	**0 301 081 121**	**0 301 081 122**	H4,T4W,H1
				Headlamp unit	1 305 321 871	1 305 321 872	
	09.96-09.03	Fg.Nr. →402177		Fog lamp	**0 305 601 011**	**0 305 601 012**	H3
	09.96-09.03	Komp.Nr. 507657/03; Komp.Nr. 507776/01	TNK	Driving lamp	**0 301 709 009**	**0 301 709 010**	H1
	09.96-09.03	Fg.Nr. →K 402177		Driving lamp	**0 306 604 011**	**0 306 604 012**	H3

Atego [LKN]

	05.98-09.04			Headlamp	**0 301 081 119**	**0 301 081 120**	H4,T4W, P21W
				Headlamp unit	1 305 321 867	1 305 321 868	
				Lens (lamp)	1 315 630 085	1 315 630 086	
			GRF	Headlamp	**0 301 081 117**	**0 301 081 118**	H4,T4W
				Headlamp unit	1 305 321 875	1 305 321 876	
			GRF,LWR	Headlamp	**0 301 081 317**	**0 301 081 318**	H4,T4W
				Headlamp unit	1 305 321 875	1 305 321 876	
				Headlight range control motor	0 307 852 328	0 307 852 328	
			LWR	Headlamp	**0 301 081 321**	**0 301 081 322**	H4,T4W, P21W
				Headlamp unit	1 305 321 867	1 305 321 868	
				Lens (lamp)	1 315 630 085	1 315 630 086	
				Headlight range control motor	0 307 852 328	0 307 852 328	
			LWR,MIN	Headlamp	**0 301 081 319**	**0 301 081 320**	H4,T4W,H1
				Headlamp unit	1 305 321 871	1 305 321 872	
				Headlight range control motor	0 307 852 328	0 307 852 328	
			MIN	Headlamp	**0 301 081 121**	**0 301 081 122**	H4,T4W,H1
				Headlamp unit	1 305 321 871	1 305 321 872	

◀ MERCEDES-BENZ

	01.98→		LWO,MIN	Headlamp	**0 318 076 323**	**0 318 076 324**	H4,W5W,H1
			LWO,ONS	Headlamp	**0 318 076 313**	**0 318 076 314**	H4,W5W
			MIN,OWR	Headlamp	**0 318 076 123**	**0 318 076 124**	H4,W5W,H1
			ONS,OWR	Headlamp	**0 318 076 113**	**0 318 076 114**	H4,W5W
	05.98-09.04			Headlight range control motor	**0 307 852 328**	**0 307 852 328**	
	05.98-09.04	Fg.Nr. →402177		Fog lamp	**0 305 601 011**	**0 305 601 012**	H3
				Driving lamp	**0 306 604 011**	**0 306 604 012**	H3

Axor

	01.02-08.06		GRF	Headlamp	**0 301 081 117**	**0 301 081 118**	H4,T4W
				Headlamp unit	1 305 321 875	1 305 321 876	
			MIN	Headlamp	**0 301 081 121**	**0 301 081 122**	H4,T4W,H1
				Headlamp unit	1 305 321 871	1 305 321 872	

Citaro

	01.99→		OWR	Headlamp	**0 318 076 113**	**0 318 076 114**	H4,W5W
	09.05→			Fog lamp	**0 305 059 001**	**0 305 059 002**	H1
	01.98→			Fog lamp	**0 305 601 011**	**0 305 601 012**	H3
			SAZ	Fog lamp	**0 305 601 013**	**0 305 601 013**	H3

Citaro L

	01.99→			Fog lamp	**0 305 601 011**	**0 305 601 012**	H3
			SAZ	Fog lamp	**0 305 601 013**	**0 305 601 013**	H3

Econic



03.98→	SAZ	Fog lamp	**0 305 601 013**	**0 305 601 013**	H3

Integro I



09.99-09.06	SWW	Headlamp	**0 301 041 001**	**0 301 041 002**	H1,H1,W5W, H1
		Headlamp unit	1 305 363 981	1 305 363 982	
		Headlamp unit, dipped beam	1 305 310 900	1 305 310 900	
		Lens (headlamp)	1 305 621 993	1 305 621 994	
		Parts set, headlamp	1 307 010 148	1 307 010 148	
		Headlamp unit, fog lamp	1 305 300 098	1 305 300 098	

Integro II



09.06→		Headlamp	**0 301 160 001**	**0 301 160 002**	H7,H1,W5W
		Lens (headlamp)	1 305 623 065	1 305 623 066	
		Seal, lamp	1 301 073 019	1 301 073 019	



09.06→		Fog lamp	**0 305 059 001**	**0 305 059 002**	H1

Intouro



01.00→	SWW	Headlamp	**0 301 011 015**	**0 301 011 016**	H1,H1,W5W
		Reflector, dipped beam	1 305 363 980	1 305 363 980	
		Lens (headlamp)	1 305 621 979	1 305 621 980	
		Reflector, main beam	1 305 321 800	1 305 321 800	

O 303



09.82-09.92	SWW	Headlamp	**0 301 060 163**	**0 301 060 164**	H4,T4W,H3
		Reflector, fog lamp	1 305 354 920	1 305 354 920	
		Lens (headlamp)	1 305 620 545	1 305 620 546	
		Seal, lamp	2 301 014 126	2 301 014 126	
12.84-09.92	EXP,XXX	Headlamp	**0 301 060 163**	**0 301 060 164**	H4,T4W,H3
		Reflector, fog lamp	1 305 354 920	1 305 354 920	
		Lens (headlamp)	1 305 621 063	1 305 621 065	
		Seal, lamp	2 301 014 126	2 301 014 126	

O 305/O 307



01.78-07.87		Headlamp	**0 301 611 101**	**0 301 611 101**	H4,T4W
			0 301 611 002	**0 301 611 002**	R2,R2,T4W

◀ MERCEDES-BENZ

O 404

	09.91-10.99	EXP,SBE	Headlamp	**0 301 041 005**	**0 301 041 006**	H1,H1,W5W, H1
			Headlamp unit	1 305 363 981	1 305 363 982	
			Headlamp unit, dipped beam	1 305 310 900	1 305 310 900	
			Lens (headlamp)	1 305 621 997	1 305 621 998	
			Parts set, headlamp	1 307 010 148	1 307 010 148	
			Headlamp unit, fog lamp	1 305 300 098	1 305 300 098	
		SWW	Headlamp	**0 301 041 001**	**0 301 041 002**	H1,H1,W5W, H1
			Headlamp unit	1 305 363 981	1 305 363 982	
			Headlamp unit, dipped beam	1 305 310 900	1 305 310 900	
			Lens (headlamp)	1 305 621 993	1 305 621 994	
			Parts set, headlamp	1 307 010 148	1 307 010 148	
			Headlamp unit, fog lamp	1 305 300 098	1 305 300 098	

O 405/O 407/O 408

	01.85-02.01		Headlamp	**0 301 060 161**	**0 301 060 162**	H4,T4W,H3
			Reflector, fog lamp	1 305 354 920	1 305 354 920	
			Lens (headlamp)	1 305 620 545	1 305 620 546	
			Seal, lamp	2 301 014 126	2 301 014 126	
	11.86-02.01		Headlamp	**0 301 060 061**	**0 301 060 062**	R2,R2,T4W, H3
			Reflector, main/dipped beam	1 305 320 898		
			Reflector, fog lamp	1 305 354 920	1 305 354 920	
			Lens (headlamp)	1 305 620 547	1 305 620 548	
			Seal, lamp	2 301 014 126	2 301 014 126	

Sprinter [T1N]

	02.95-05.06		KW,ONE	Tail lamp	**0 318 337 002**	P21/5W, P21W,P21/ 5W,P21W
		Komp.Nr. 500612/01; Komp.Nr. 500612/02	KW,TNK	Tail lamp	**0 318 337 003**	**0 318 337 004**	P21W,P21/ 5W,P21W, P21W
	08.02-05.06			Tail lamp	**0 318 337 005**	**0 318 337 006**	P21W, PY21W,P21/ 5W,P21W

Travego

	10.99-02.06		Headlamp	**0 301 160 001**	**0 301 160 002**	H7,H1,W5W
			Lens (headlamp)	1 305 623 065	1 305 623 066	
			Seal, lamp	1 301 073 019	1 301 073 019	
	10.99→		Fog lamp	**0 305 059 001**	**0 305 059 002**	H1

Unimog

	09.02→		Headlamp	**0 318 127 013**	**0 318 127 014**	H7,H1,W5W

	01.77-05.88			Headlamp	**0 301 007 101**	**0 301 007 102**	H4,T4W
	01.77-05.88			Headlamp	**0 301 500 004**	**0 301 500 004**	R2,R2,T4W
			WW	Headlamp	**0 301 500 005**	**0 301 500 005**	R2,R2,T4W
	05.88-02.01	Fh.Nr. →159140		Headlamp	**0 301 500 004**	**0 301 500 004**	R2,R2,T4W
	04.00→			Headlight range control motor	**0 307 853 309**	**0 307 853 309**	

Vito [638 T0N]

	12.95-08.03		TW	Tail lamp	**0 319 332 103**	**0 319 332 104**	P21/5W, P21W,P21/ 5W,P21W, P21W
	12.95-08.03		TW	Tail lamp, glass	**0 319 332 143**	**0 319 332 144**	

5t/6t/7t/8t

	04.86-09.01	Fg.Nr. N000001→; P129546→		Headlamp	**0 301 021 317**	**0 301 021 318**	H4,T4W
				Headlamp unit	1 305 365 911	1 305 365 911	
				Lens (headlamp)	1 305 620 589	1 305 620 590	
				Sealing cord, lens	1 301 014 050	1 301 014 050	
	04.86-02.01			Headlamp	**0 301 021 315**	**0 301 021 316**	H4,T4W
				Headlamp unit	1 305 365 911	1 305 365 911	
				Lens (headlamp)	1 305 620 589	1 305 620 590	
				Sealing cord, lens	1 301 014 050	1 301 014 050	
			LWO	Headlamp	**0 301 021 317**	**0 301 021 318**	H4,T4W
				Headlamp unit	1 305 365 911	1 305 365 911	
				Lens (headlamp)	1 305 620 589	1 305 620 590	
				Sealing cord, lens	1 301 014 050	1 301 014 050	

7t/8t [LK]

	03.84-12.99		LWO	Headlamp	**0 301 021 317**	**0 301 021 318**	H4,T4W
				Headlamp unit	1 305 365 911	1 305 365 911	
				Lens (headlamp)	1 305 620 589	1 305 620 590	
				Sealing cord, lens	1 301 014 050	1 301 014 050	

9t/11t/13t/15t/19t/26t

	10.68-02.01			Headlamp	**0 301 801 014**	**0 301 801 015**	R2,R2,T4W
				Headlamp unit	1 305 314 127	1 305 314 126	
				Lens (headlamp)	1 305 604 089	1 305 604 087	
				Seal, frame	1 300 212 023	1 300 212 023	
				Outer rim	1 305 504 948	1 305 504 949	

◀ MERCEDES-BENZ

	01.78-03.92	EST	Headlamp	**0 301 007 101**	**0 301 007 102**	H4,T4W
9t/11t/13t/15t/20t [LK]						
	03.84-02.01		Headlamp	**0 301 021 315**	**0 301 021 316**	H4,T4W
			Headlamp unit	1 305 365 911	1 305 365 911	
			Lens (headlamp)	1 305 620 589	1 305 620 590	
			Sealing cord, lens	1 301 014 050	1 301 014 050	
	07.86-02.93	LWO	Headlamp	**0 301 021 317**	**0 301 021 318**	H4,T4W
			Headlamp unit	1 305 365 911	1 305 365 911	
			Lens (headlamp)	1 305 620 589	1 305 620 590	
			Sealing cord, lens	1 301 014 050	1 301 014 050	
10t/12t/14t/16t/19t/20t/22t/24t/25t/26t/30t/32t/33t/35t						
	11.74-10.88		Headlamp	**0 301 057 100**	**0 301 057 101**	H4,T4W, P21W
			Headlamp unit	2 305 320 920	2 305 320 920	
			Lens (headlamp)	2 305 620 904	2 305 620 905	
			Seal, lamp	2 301 014 134	2 301 014 134	
			Light filter	2 305 610 301	2 305 610 301	
	11.88-03.91		Headlamp	**0 301 057 007**	**0 301 057 008**	R2,R2,T4W, P21W
			Headlamp unit	2 305 320 918	2 305 320 918	
			Lens (headlamp)	2 305 620 900	2 305 620 901	
			Seal, lamp	2 301 014 134	2 301 014 134	
			Light filter	1 305 621 230	1 305 621 230	
		OWR	Headlamp	**0 301 057 105**	**0 301 057 106**	H4,T4W, P21W
			Headlamp unit	2 305 320 920	2 305 320 920	
			Lens (headlamp)	2 305 620 904	2 305 620 905	
			Seal, lamp	2 301 014 134	2 301 014 134	
			Light filter	1 305 621 230	1 305 621 230	
	01.90-03.91	LWO	Headlamp	**0 301 057 305**	**0 301 057 306**	H4,T4W, P21W
			Headlamp unit	1 305 320 406	1 305 320 407	
			Lens (headlamp)	2 305 620 904	2 305 620 905	
			Seal, lamp	2 301 014 134	2 301 014 134	
			Light filter	1 305 621 230	1 305 621 230	
12t/14t/16t/23t/24t/25t [MK]						
	12.88-09.96	OWR	Headlamp	**0 301 057 105**	**0 301 057 106**	H4,T4W, P21W
			Headlamp unit	2 305 320 920	2 305 320 920	
			Lens (headlamp)	2 305 620 904	2 305 620 905	
			Seal, lamp	2 301 014 134	2 301 014 134	
			Light filter	1 305 621 230	1 305 621 230	
			Headlamp	**0 301 057 007**	**0 301 057 008**	R2,R2,T4W, P21W
			Headlamp unit	2 305 320 918	2 305 320 918	
			Lens (headlamp)	2 305 620 900	2 305 620 901	
			Seal, lamp	2 301 014 134	2 301 014 134	
			Light filter	1 305 621 230	1 305 621 230	
	01.90-09.96	LWO	Headlamp	**0 301 057 305**	**0 301 057 306**	H4,T4W, P21W
			Headlamp unit	1 305 320 406	1 305 320 407	
			Lens (headlamp)	2 305 620 904	2 305 620 905	
			Seal, lamp	2 301 014 134	2 301 014 134	
			Light filter	1 305 621 230	1 305 621 230	

17t/18t/19t/20t/24t [SK]



07.88-10.88		Headlamp	**0 301 057 100**	**0 301 057 101**	H4,T4W, P21W
		Headlamp unit	2 305 320 920	2 305 320 920	
		Light filter	2 305 610 301	2 305 610 301	
07.88-02.01		Headlamp	**0 301 057 305**	**0 301 057 306**	H4,T4W, P21W
		Headlamp unit	1 305 320 406	1 305 320 407	
		Lens (headlamp)	2 305 620 904	2 305 620 905	
		Seal, lamp	2 301 014 134	2 301 014 134	
		Light filter	1 305 621 230	1 305 621 230	
11.88-02.01	OWR	Headlamp	**0 301 057 105**	**0 301 057 106**	H4,T4W, P21W
		Headlamp unit	2 305 320 920	2 305 320 920	
		Lens (headlamp)	2 305 620 904	2 305 620 905	
		Seal, lamp	2 301 014 134	2 301 014 134	
		Light filter	1 305 621 230	1 305 621 230	
01.90-02.01	LWO	Headlamp	**0 301 057 305**	**0 301 057 306**	H4,T4W, P21W
		Headlamp unit	1 305 320 406	1 305 320 407	
		Lens (headlamp)	2 305 620 904	2 305 620 905	
		Seal, lamp	2 301 014 134	2 301 014 134	
		Light filter	1 305 621 230	1 305 621 230	

25t/26t/30t/35t/44t [SK]



11.81-02.01	OWR	Headlamp	**0 301 057 105**	**0 301 057 106**	H4,T4W, P21W
		Headlamp unit	2 305 320 920	2 305 320 920	
		Lens (headlamp)	2 305 620 904	2 305 620 905	
		Seal, lamp	2 301 014 134	2 301 014 134	
		Light filter	1 305 621 230	1 305 621 230	
		Headlamp	**0 301 057 007**	**0 301 057 008**	R2,R2,T4W, P21W
		Headlamp unit	2 305 320 918	2 305 320 918	
		Lens (headlamp)	2 305 620 900	2 305 620 901	
		Seal, lamp	2 301 014 134	2 301 014 134	
		Light filter	1 305 621 230	1 305 621 230	
01.90-02.01		Headlamp	**0 301 057 305**	**0 301 057 306**	H4,T4W, P21W
		Headlamp unit	1 305 320 406	1 305 320 407	
		Lens (headlamp)	2 305 620 904	2 305 620 905	
		Seal, lamp	2 301 014 134	2 301 014 134	
		Light filter	1 305 621 230	1 305 621 230	

Trac

900/1100/1300/1500



10.76-03.87		Headlamp	**0 301 203 001**	**0 301 203 001**	R2,R2,T4W

NEOPLAN

Cityliner/Clubliner/Jetliner/Jumbocruiser/Metroliner/Skyliner/Spaceliner



09.85-05.01		Headlamp unit, main beam	**0 301 709 001**	**0 301 709 001**	H1



09.85-05.87		Headlamp unit, dipped beam	**0 301 740 001**	**0 301 740 002**	H1,W5W
06.87-05.01		Headlamp unit, dipped beam	**0 301 740 011**	**0 301 740 012**	H1,T4W



09.85-05.01		Headlamp housing assembly	**0 302 703 001**	**0 302 703 002**	
		Parts set, headlamp	1 307 010 146	1 307 010 146	
		Outer rim	1 305 540 121	1 305 540 121	
		Frame, main/dipped beam	1 305 543 110	1 305 543 110	

NISSAN

Urvan [E23]



04.82-01.87	OS	Headlamp unit, main beam	**0 301 303 034**	**0 301 303 034**	H1
		Headlamp unit, dipped beam	**0 301 302 101**	**0 301 302 101**	H4

Vanette/Vanette [C120]



06.81-07.89	OS	Headlamp unit, main beam	**0 301 303 034**	**0 301 303 034**	H1
		Headlamp unit, dipped beam	**0 301 302 101**	**0 301 302 101**	H4



11.82-07.89		Headlamp unit, main beam	**0 301 709 001**	**0 301 709 001**	H1
		Headlamp unit, dipped beam	**0 301 709 100**	**0 301 709 100**	H4

OPEL

Movano

	06.98-08.03	LWO	Headlamp	**0 318 079 313**	**0 318 079 314**	H4,W5W
	06.98-08.03		Turn signal lamp, front	**0 318 237 203**	**0 318 237 204**	P21W
	04.99→		Turn signal lamp, front	**0 319 206 203**	**0 319 206 204**	PY21W
	04.99→		Tail lamp	**0 319 206 203**	**0 319 361 204**	P21/5W, PY21W,P21/ 5W,P21W, P21W

Vivaro

	04.01-08.06	TW	Tail lamp	**0 319 368 201**	**0 319 368 202**	P21W,P21W
	04.01-08.06	TW	Tail lamp	**0 319 368 203**	**0 319 368 204**	P21W,P21W
	04.01-08.06	KOB	Tail lamp	**0 319 368 205**	**0 319 368 206**	P21W,P21W

PEUGEOT

Boxer [U3]

	02.94-08.00	BUS,FOS, KW,MHY	Headlamp	**0 318 016 313**	**0 318 016 314**	H4,W5W
	02.94-02.02	FSR,LWO	Headlamp	**0 318 016 323**	**0 318 016 324**	H4,W5W
	09.00-02.02	BUS,KW, LWM	Headlamp	**0 318 113 313**	**0 318 113 314**	H4,W5W
	02.94-02.02		Turn signal lamp, front	**0 318 209 203**	**0 318 209 204**	PY21W
	02.94-02.02		Fog lamp	**0 318 412 003**	**0 318 412 004**	H3

J 5

	07.84-12.89	XXX	Headlamp unit	**0 318 014 113**	**0 318 014 114**	H4,T4W
				0 318 014 103	**0 318 014 104**	R2,R2,T4W
	01.90-12.93		Headlamp unit	**0 318 015 103**	**0 318 015 104**	R2,R2,T4W
	01.90-12.93	SE	Turn signal lamp, front	**0 318 208 203**	**0 318 208 204**	P21W
	06.90-12.93	RNL	Tail lamp	**0 318 311 003**	**0 318 311 004**	R5W,P21W, P21W,P21W

RENAULT

C [Ligne 3]



12.86-03.93	Headlamp	**0 301 017 307**	**0 301 017 307**	H4,T4W
	Headlamp unit	1 305 365 913	1 305 365 913	
	Lens (headlamp)	1 305 620 468	1 305 620 468	
	Seal, lamp	1 301 014 203	1 301 014 203	
		2 301 014 134	2 301 014 134	
	Frame, main/dipped beam	1 305 544 901	1 305 544 901	
	Headlamp	**0 301 017 005**	**0 301 017 005**	R2,R2,T4W
	Headlamp unit	1 305 365 912	1 305 365 912	
	Lens (headlamp)	1 305 620 467	1 305 620 467	
	Seal, lamp	1 301 014 203	1 301 014 203	
		2 301 014 134	2 301 014 134	
	Frame, main/dipped beam	1 305 544 901	1 305 544 901	

CBH/CLM



04.86-01.93	Headlamp	**0 301 017 307**	**0 301 017 307**	H4,T4W
	Headlamp unit	1 305 365 913	1 305 365 913	
	Lens (headlamp)	1 305 620 468	1 305 620 468	
	Seal, lamp	1 301 014 203	1 301 014 203	
		2 301 014 134	2 301 014 134	
	Frame, main/dipped beam	1 305 544 901	1 305 544 901	
	Headlamp	**0 301 017 005**	**0 301 017 005**	R2,R2,T4W
	Headlamp unit	1 305 365 912	1 305 365 912	
	Lens (headlamp)	1 305 620 467	1 305 620 467	
	Seal, lamp	1 301 014 203	1 301 014 203	
		2 301 014 134	2 301 014 134	
	Frame, main/dipped beam	1 305 544 901	1 305 544 901	

CLR



12.86-10.98	Headlamp	**0 301 017 005**	**0 301 017 005**	R2,R2,T4W
	Headlamp unit	1 305 365 912	1 305 365 912	
	Lens (headlamp)	1 305 620 467	1 305 620 467	
	Seal, lamp	1 301 014 203	1 301 014 203	
		2 301 014 134	2 301 014 134	
	Frame, main/dipped beam	1 305 544 901	1 305 544 901	
06.87-10.98	Headlamp	**0 301 017 307**	**0 301 017 307**	H4,T4W
	Headlamp unit	1 305 365 913	1 305 365 913	
	Lens (headlamp)	1 305 620 468	1 305 620 468	
	Seal, lamp	1 301 014 203	1 301 014 203	
		2 301 014 134	2 301 014 134	
	Frame, main/dipped beam	1 305 544 901	1 305 544 901	
05.86-10.98	Headlight range control	**0 307 550 926**	**0 307 550 926**	

FR



10.82-12.96	SWG	Fog lamp	**0 305 402 101**	**0 305 402 101**	H3

◀ RENAULT

Magnum

	01.97-03.01		Headlight range control motor	**0 307 852 352**	**0 307 852 352**	

Mascott

	01.99-06.04	LWO	Headlamp	**0 318 079 313**	**0 318 079 314**	H4,W5W
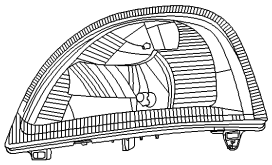	05.04→	LWM	Headlamp	**0 318 126 213**	**0 318 126 214**	H7,H1,W5W
	01.99-06.04		Fog lamp	**0 318 435 005**	**0 318 435 006**	H1

Master

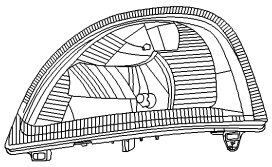	11.06→	LWM	Headlamp	**0 318 126 213**	**0 318 126 214**	H7,H1,W5W

Master [X70]

	10.97-09.03	LWO	Headlamp	**0 318 079 313**	**0 318 079 314**	H4,W5W
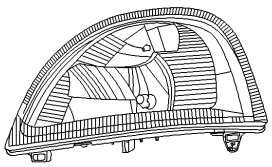	10.03-10.06	LWM	Headlamp	**0 318 126 213**	**0 318 126 214**	H7,H1,W5W
	10.97-10.04		Turn signal lamp, front	**0 318 239 003**	**0 318 239 004**	P21W

	06.02-09.03		Turn signal lamp, front	**0 318 239 005**	**0 318 239 006**	P21W
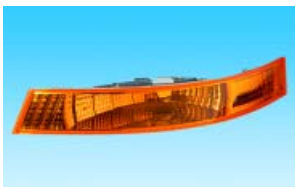	01.98-01.04	BLG	Turn signal lamp, front	**0 319 209 103**	**0 319 209 104**	P21W
	01.98-01.04		Turn signal lamp, front	**0 319 209 203**	**0 319 209 204**	PY21W
	01.98-01.04		Turn signal lamp, front	**0 319 209 403**	**0 319 209 404**	PY21W
	10.97-10.06		Fog lamp	**0 318 435 005**	**0 318 435 006**	H1
Midliner						
	11.91-12.01		Headlamp	**0 301 017 005**	**0 301 017 005**	R2,R2,T4W
			Headlamp unit	1 305 365 912	1 305 365 912	
			Lens (headlamp)	1 305 620 467	1 305 620 467	
			Seal, lamp	1 301 014 203	1 301 014 203	
				2 301 014 134	2 301 014 134	
			Frame, main/dipped beam	1 305 544 901	1 305 544 901	
	06.89-12.01		Manual adjustment unit, LWR; (headlight range control)	**0 307 550 928**	**0 307 550 928**	
R						
	11.86-12.03	SWG	Fog lamp	**0 305 402 101**	**0 305 402 101**	H3
		SWW	Fog lamp	**0 305 402 117**	**0 305 402 117**	H3
	06.89-12.03	SWW	Driving lamp	**0 306 407 101**	**0 306 407 101**	H3

◀ RENAULT

S

	10.82-01.00			Manual adjustment unit, LWR; (headlight range control)	**0 307 550 928**	**0 307 550 928**	

Tracer



	03.92→		SWG	Fog lamp	**0 305 402 101**	**0 305 402 101**	H3
			SWW	Fog lamp	**0 305 402 117**	**0 305 402 117**	H3

SCANIA

Serie 82



	05.80-03.88			Headlamp	**0 301 022 301**	**0 301 022 302**	H4
				Headlamp unit	1 305 363 923	1 305 363 923	
				Lens (headlamp)	1 305 620 962	1 305 620 962	
				Seal, lamp	1 301 014 030	1 301 014 030	
					1 301 014 203	1 301 014 203	
				Headlamp	**0 301 022 001**	**0 301 022 002**	R2,R2
				Headlamp unit	1 305 363 922	1 305 363 922	
				Lens (headlamp)	1 305 620 960	1 305 620 960	
				Seal, lamp	1 301 014 030	1 301 014 030	
					1 301 014 203	1 301 014 203	
	05.80-03.88		XXX	Headlight range control	**0 307 550 907**	**0 307 550 907**	

Serie 92



	01.85-03.88			Headlamp	**0 301 022 301**	**0 301 022 302**	H4
				Headlamp unit	1 305 363 923	1 305 363 923	
				Lens (headlamp)	1 305 620 962	1 305 620 962	
				Seal, lamp	1 301 014 030	1 301 014 030	
					1 301 014 203	1 301 014 203	
				Headlamp	**0 301 022 001**	**0 301 022 002**	R2,R2
				Headlamp unit	1 305 363 922	1 305 363 922	
				Lens (headlamp)	1 305 620 960	1 305 620 960	
				Seal, lamp	1 301 014 030	1 301 014 030	
					1 301 014 203	1 301 014 203	

Serie 93



	03.88-08.97	Fg.Nr. →1173434 SSS; →4306438 SNL		Headlamp	**0 301 022 301**	**0 301 022 302**	H4
				Headlamp unit	1 305 363 923	1 305 363 923	
				Lens (headlamp)	1 305 620 962	1 305 620 962	
				Seal, lamp	1 301 014 030	1 301 014 030	
					1 301 014 203	1 301 014 203	
				Headlamp	**0 301 022 001**	**0 301 022 002**	R2,R2
				Headlamp unit	1 305 363 922	1 305 363 922	
				Lens (headlamp)	1 305 620 960	1 305 620 960	
				Seal, lamp	1 301 014 030	1 301 014 030	
					1 301 014 203	1 301 014 203	
		Fg.Nr. 1173435 SSS→; 4306439 SNL→		Headlamp	**0 301 022 305**	**0 301 022 306**	H4
				Headlamp unit	1 305 363 923	1 305 363 923	
				Lens (headlamp)	1 305 620 962	1 305 620 962	
				Seal, lamp	1 301 014 030	1 301 014 030	
					1 301 014 203	1 301 014 203	
	03.88-08.97		WW,XXX	Headlight range control	**0 307 550 907**	**0 307 550 907**	

Serie 112



05.80-05.88			Headlamp	**0 301 022 301**	**0 301 022 302**	H4
			Headlamp unit	1 305 363 923	1 305 363 923	
			Lens (headlamp)	1 305 620 962	1 305 620 962	
			Seal, lamp	1 301 014 030	1 301 014 030	
				1 301 014 203	1 301 014 203	
			Headlamp	**0 301 022 001**	**0 301 022 002**	R2,R2
			Headlamp unit	1 305 363 922	1 305 363 922	
			Lens (headlamp)	1 305 620 960	1 305 620 960	
			Seal, lamp	1 301 014 030	1 301 014 030	
				1 301 014 203	1 301 014 203	
05.80-05.88		XXX	Headlight range control	**0 307 550 907**	**0 307 550 907**	

Serie 112 [BUS]



09.78-12.90			Headlamp	**0 301 810 100**	**0 301 810 100**	H4,T4W
			Headlamp unit	1 305 314 929	1 305 314 929	
			Lens (headlamp)	1 305 604 026	1 305 604 026	
			Seal, frame	1 300 212 013	1 300 212 013	
			Outer rim	1 305 504 930	1 305 504 930	
			Headlamp	**0 301 810 001**	**0 301 810 001**	R2,R2
			Headlamp unit	1 305 314 107	1 305 314 107	
			Lens (headlamp)	1 305 604 100	1 305 604 100	
			Seal, frame	1 300 212 013	1 300 212 013	
			Outer rim	1 305 504 930	1 305 504 930	



05.82-11.99			Tail lamp	**0 311 316 004**	**0 311 316 004**	P21W

Serie 113



05.88-05.00	Fg.Nr. →1173434 SSS; →4306438 SNL		Headlamp	**0 301 022 301**	**0 301 022 302**	H4
			Headlamp unit	1 305 363 923	1 305 363 923	
			Lens (headlamp)	1 305 620 962	1 305 620 962	
			Seal, lamp	1 301 014 030	1 301 014 030	
				1 301 014 203	1 301 014 203	
			Headlamp	**0 301 022 001**	**0 301 022 002**	R2,R2
			Headlamp unit	1 305 363 922	1 305 363 922	
			Lens (headlamp)	1 305 620 960	1 305 620 960	
			Seal, lamp	1 301 014 030	1 301 014 030	
				1 301 014 203	1 301 014 203	
	Fg.Nr. 1173435 SSS→; 4306439 SNL→		Headlamp	**0 301 022 305**	**0 301 022 306**	H4
			Headlamp unit	1 305 363 923	1 305 363 923	
			Lens (headlamp)	1 305 620 962	1 305 620 962	
			Seal, lamp	1 301 014 030	1 301 014 030	
				1 301 014 203	1 301 014 203	
05.88-12.00		WW,XXX	Headlight range control	**0 307 550 907**	**0 307 550 907**	

Serie 113 [BUS]



05.90-08.98			Tail lamp	**0 311 316 004**	**0 311 316 004**	P21W

◀ SCANIA

Serie 142

	05.80-03.88			Headlamp	**0 301 022 301**	**0 301 022 302**	H4
				Headlamp unit	1 305 363 923	1 305 363 923	
				Lens (headlamp)	1 305 620 962	1 305 620 962	
				Seal, lamp	1 301 014 030	1 301 014 030	
					1 301 014 203	1 301 014 203	
				Headlamp	**0 301 022 001**	**0 301 022 002**	R2,R2
				Headlamp unit	1 305 363 922	1 305 363 922	
				Lens (headlamp)	1 305 620 960	1 305 620 960	
				Seal, lamp	1 301 014 030	1 301 014 030	
					1 301 014 203	1 301 014 203	
	05.80-03.88		XXX	Headlight range control	**0 307 550 907**	**0 307 550 907**	

Serie 143

	03.88-12.96	Fg.Nr. →1173434 SSS; →4306438 SNL		Headlamp	**0 301 022 301**	**0 301 022 302**	H4
				Headlamp unit	1 305 363 923	1 305 363 923	
				Lens (headlamp)	1 305 620 962	1 305 620 962	
				Seal, lamp	1 301 014 030	1 301 014 030	
					1 301 014 203	1 301 014 203	
				Headlamp	**0 301 022 001**	**0 301 022 002**	R2,R2
				Headlamp unit	1 305 363 922	1 305 363 922	
				Lens (headlamp)	1 305 620 960	1 305 620 960	
				Seal, lamp	1 301 014 030	1 301 014 030	
					1 301 014 203	1 301 014 203	
		Fg.Nr. 1173435 SSS→; 4306439 SNL→		Headlamp	**0 301 022 305**	**0 301 022 306**	H4
				Headlamp unit	1 305 363 923	1 305 363 923	
				Lens (headlamp)	1 305 620 962	1 305 620 962	
				Seal, lamp	1 301 014 030	1 301 014 030	
					1 301 014 203	1 301 014 203	
	03.88-12.96		WW,XXX	Headlight range control	**0 307 550 907**	**0 307 550 907**	

SISU

SK/SM/SR

	07.84-12.95			Headlamp	**0 301 017 102**	**0 301 017 102**	H4,T4W
				Headlamp unit	1 305 365 913	1 305 365 913	
				Lens (headlamp)	1 305 620 468	1 305 620 468	
				Seal, lamp	1 301 014 203	1 301 014 203	
					2 301 014 134	2 301 014 134	
				Seal, frame	1 301 014 226	1 301 014 226	
				Frame, main/dipped beam	1 305 544 018	1 305 544 018	

STEYR (STEYR-DAIMLER-PUCH AG)

Pinzgauer

	10.86-12.96			Headlamp	**0 301 608 120**	**0 301 608 120**	H4,T4W

9 S

	04.86→			Headlight range control	**0 307 550 923**	**0 307 550 923**	

10 S							
	04.86→		Headlight range control	**0 307 550 923**	**0 307 550 923**		
12 M							
	09.86→	XXX	Headlamp	**0 301 603 101**	**0 301 603 102**	H4	
			Parts set, headlamp	1 307 010 014	1 307 010 014		
			Headlamp unit, main/dipped beam	1 305 303 103	1 305 303 103		
12/13/14/15/16 S							
	04.86→		Headlight range control	**0 307 550 923**	**0 307 550 923**		

VAUXHALL

Movano							
	06.98→	LWO	Headlamp	**0 318 079 313**	**0 318 079 314**	H4,W5W	
	06.98→		Turn signal lamp, front	**0 318 237 203**	**0 318 237 204**	P21W	
Vivaro							
	08.06-08.06	TW	Tail lamp	**0 319 368 201**	**0 319 368 202**	P21W,P21W	
	08.06-08.06	TW	Tail lamp	**0 319 368 203**	**0 319 368 204**	P21W,P21W	
	08.06-08.06	KOB	Tail lamp	**0 319 368 205**	**0 319 368 206**	P21W,P21W	

VOLVO

BB



09.78-01.96		XXX	Headlamp	**0 301 802 012**	**0 301 802 012**	R2,R2,T4W
			Lens (headlamp)	1 305 604 060	1 305 604 060	
			Outer rim	1 305 504 115	1 305 504 115	
				1 305 504 927	1 305 504 927	

F



08.78-05.88			Headlamp unit	**0 301 813 103**	**0 301 813 103**	H4
				0 301 813 001	**0 301 813 001**	R2,R2
02.85-12.94	Fg.Nr. 314000→	XXX	Headlight range control motor	**0 132 008 305**	**0 132 008 305**	

FL



09.85-05.87	Fg.Nr. →417221		Headlamp	**0 301 017 303**	**0 301 017 303**	H4,T4W
			Headlamp unit	1 305 365 913	1 305 365 913	
			Lens (headlamp)	1 305 620 468	1 305 620 468	
			Seal, lamp	1 301 014 203	1 301 014 203	
				2 301 014 134	2 301 014 134	
			Seal, frame	1 301 014 226	1 301 014 226	
02.86-05.87		XXX	Headlamp	**0 301 017 202**	**0 301 017 202**	R2,R2,T4W
			Lens (headlamp)	1 305 620 986	1 305 620 986	
			Seal, lamp	1 301 014 203	1 301 014 203	
				2 301 014 134	2 301 014 134	
			Seal, frame	1 301 014 226	1 301 014 226	
			Frame, main/dipped beam	1 305 544 901	1 305 544 901	
09.85-12.96	Fg.Nr. 462197→; 531002→	XXX	Headlight range control motor	**0 132 008 305**	**0 132 008 305**	
09.85-12.01		XXX	Headlight range control motor	**0 132 008 305**	**0 132 008 305**	



09.85-10.99			Fog lamp	**0 305 001 004**	**0 305 001 004**	H3



09.85-10.99		WW	Fog lamp	**0 305 402 001**	**0 305 402 001**	H3
02.95-08.00	Fg.Nr. B166080→		Fog lamp	**0 305 402 001**	**0 305 402 001**	H3
08.95-12.96			Fog lamp	**0 305 402 001**	**0 305 402 001**	H3

N



08.78-11.87			Headlamp unit	**0 301 813 103**	**0 301 813 103**	H4
				0 301 813 001	**0 301 813 001**	R2,R2
09.86-01.96	Fg.Nr. 306000→		Headlamp unit	**0 301 813 103**	**0 301 813 103**	H4

VW (VOLKSWAGEN)

California T5 [7H]



02.03-05.05		LWM	Headlamp	**0 301 191 301**	**0 301 191 302**	H4,W5W, PY21W



02.03→		LWM,SH7	Headlamp	**0 301 195 201**	**0 301 195 202**	H7,H1,W5W, PY21W
02.03→			Headlight range control motor	**0 307 853 304**	**0 307 853 304**	

Caravelle T5 [7H]



02.03-05.05		LWM	Headlamp	**0 301 191 301**	**0 301 191 302**	H4,W5W, PY21W



02.03→		LWM,SH7	Headlamp	**0 301 195 201**	**0 301 195 202**	H7,H1,W5W, PY21W
02.03→			Headlight range control motor	**0 307 853 304**	**0 307 853 304**	

Multivan T5 [7H]



02.03-05.05		LWM	Headlamp	**0 301 191 301**	**0 301 191 302**	H4,W5W, PY21W

◀ VW

	02.03→		LWM,SH7	Headlamp	**0 301 195 201**	**0 301 195 202**	H7,H1,W5W, PY21W
	02.03→			Headlight range control motor	**0 307 853 304**	**0 307 853 304**	
Transporter T3 [24, 25]							
	01.81-07.92			Headlamp unit	**0 301 608 160**	**0 301 608 160**	H4,T4W
Transporter T5 [7H]							
	02.03-05.05		LWM	Headlamp	**0 301 191 301**	**0 301 191 302**	H4,W5W, PY21W
	02.03→		LWM,SH7	Headlamp	**0 301 195 201**	**0 301 195 202**	H7,H1,W5W, PY21W
	02.03→			Headlight range control motor	**0 307 853 304**	**0 307 853 304**	
Transporter T5 [7J]							
	04.03-05.05		LWM	Headlamp	**0 301 191 301**	**0 301 191 302**	H4,W5W, PY21W

de
Gegenüberstellung

en
Cross-reference

fr
Table de correspondance

it
Comparazione

es
Equivalencias

Benutzerhinweise

Im nachfolgenden Katalogteil sind Bestellnummern von Herstellern anderer Marken, für die es einbaugleiche Bosch-Erzeugnisse oder -Teile gibt, aufgeführt. Da die verschiedenartigsten Bezeichnungssysteme angewendet werden, konnten die fremden Bestellnummern nur in einer einheitlichen, alphanumerischen Sortierfolge geordnet werden. Sie weicht bei einigen Herstellern von der dort üblichen Sortierfolge ab. Eine Rückumschlüsselung von Bosch- zu Fremdnummern ist nicht zulässig.

Notes for users

The following catalog section lists part numbers of non-Bosch equipment for which there are interchangeable Bosch products or components available. Since a wide range of different designation systems are used, we were forced to arrange the non-Bosch part numbers in a uniform alphanumerical order. This differs from the customary order employed by some manufacturers. Reconversion of Bosch numbers back to the numbers of other manufacturers is not permitted.

A l'attention de l'utilisateur

Cette section du catalogue reprend les références des fabricants d'autres marques pour lesquelles il existe des produits ou des composants Bosch de montage identique. De multiples systèmes de codage étant utilisés, les références des produits d'autres marques ne peuvent être reprises que suivant un classement alphanumérique uniforme. Pour certains fabricants, ce classement peut différer de celui qu'ils utilisent habituellement. La reconversion de références Bosch en références d'autres marques n'est pas autorisée.

Avvertenze per la consultazione

Nella seguente parte del catalogo vengono riportati i numeri di ordinazione di costruttori di prodotti d'altra marca, per i quali sono disponibili prodotti o parti di prodotti Bosch di corrispondente applicazione. Dato che vengono utilizzati i più diversi sistemi di denominazione, si è potuto ordinare i numeri di ordinazione di altra marca solo in una sequenza di classificazione unitaria ed alfanumerica. Per alcune case costruttrici si differenzia perciò dalla sequenza di classificazione normalmente usata. In questo confronto le sigle Bosch vanno considerate come dati indicativi. Non è ammessa una ricodificazione da numeri di ordinazione Bosch a numeri di altra marca.

Indicaciones para el usuario

A continuación se han relacionado números de pedido de fabricantes de otras marcas para los que existen productos o piezas Bosch de iguales características. Dado que se utilizan los más diversos sistemas de designación, los números de pedido ajenos han podido relacionarse tan sólo en un orden unificado, alfanumérico. En el caso de algunos fabricantes, el orden de esta clasificación difiere del que utilizan habitualmente. No es admisible la recodificación de los números de Bosch en números ajenos.

Hinweis

Aus wettbewerbsrechtlichen Gründen dürfen gegenüber Endkunden zur Kennzeichnung von Bosch-Teilen nur die Bosch-Teilenummern verwendet werden.

Note

The laws governing competition stipulate that only Bosch type numbers may be used vis-à-vis the final customer for the identification of Bosch parts.

Remarque

En raison des dispositions légales concernant la concurrence seules les références Bosch peuvent être utilisées vis-à-vis des clients finaux pour l'identification des pièces Bosch.

Avvertenza

Per motivi legati ai diritti che regolano la concorrenza, per l'identificazione dei componenti Bosch destinati all'utente finale, possono essere impiegati solo i codici Bosch.

Nota

Por aspectos legales relativos a la competencia, de cara a los clientes finales únicamente deben utilizarse los números de piezas tipo Bosch para identificar piezas Bosch.

CITROEN

1562 65	**1 460 109 304**
1631 43	**1 460 109 304**
18 51 754 000	**0 305 053 002**
18 51 754 000	**0 305 053 004**
18 51 755 000	**0 305 053 001**
18 51 755 000	**0 305 053 003**
18 51 756 000	**0 305 054 002**
18 51 757 000	**0 305 054 001**
18 54 171 000	**0 305 054 012**
18 54 172 000	**0 305 054 011**
1941 01	**2 916 710 602**
1978 05	**2 916 710 602**
1978 06	**2 916 710 602**
5933 18	**1 230 210 004**
6204 F8	**0 318 083 513**
6204 G7	**0 318 437 003**
6204 J4	**0 318 411 003**
6204 K8	**0 318 083 523**
6204 L0	**0 318 082 813**
6204 L3	**0 318 412 003**
6204 N3	**0 318 434 003**
6204 Q0	**0 318 439 009**
6204 Q9	**0 305 053 001**
6204 Q9	**0 305 053 003**
6204 R0	**0 305 054 001**
6204 R5	**0 318 012 813**
6204 R8	**0 318 012 713**
6204 S1	**0 318 410 013**
6204 S5	**0 318 113 815**
6204 V9	**0 305 054 011**
6204 X7	**0 318 012 513**
6204 ZN	**0 318 125 713**
6204 ZT	**0 318 012 013**
6204 ZX	**0 318 123 813**
6204 Z7	**0 318 123 713**
6204 75	**0 318 490 069**
6204 77	**0 318 590 009**
6204 87	**0 318 490 059**
6205 F8	**0 318 083 514**
6205 G7	**0 318 437 004**
6205 J4	**0 318 411 004**
6205 K8	**0 318 083 524**
6205 L0	**0 318 082 814**
6205 L3	**0 318 412 004**
6205 N3	**0 318 434 004**
6205 Q9	**0 305 053 002**
6205 Q9	**0 305 053 004**
6205 R0	**0 305 054 002**
6205 R5	**0 318 012 814**
6205 R8	**0 318 012 714**
6205 S1	**0 318 410 014**
6205 S5	**0 318 113 816**
6205 V9	**0 305 054 012**
6205 X7	**0 318 012 514**
6205 ZN	**0 318 125 714**
6205 ZT	**0 318 012 014**
6205 ZX	**0 318 123 814**
6205 Z7	**0 318 123 714**
6205 77	**0 318 490 089**
6205 85	**0 318 490 069**
6206 36	**0 318 434 006**
6208 E1	**0 318 439 009**
6208 35	**0 301 213 673**
6208 36	**0 318 434 005**
6255 85	**0 318 436 009**
6303 43	**0 318 209 203**
6303 44	**0 318 209 204**
6303 69	**0 319 203 203**
6303 70	**0 319 203 204**
6303 71	**0 318 437 005**
6303 72	**0 318 437 006**
6350 CA	**0 319 392 205**
6350 CC	**0 319 392 203**
6350 C0	**0 319 329 103**
6350 F7	**0 319 327 403**
6350 H1	**0 319 321 113**
6350 H2	**0 319 321 103**
6350 J5	**0 319 328 203**
6350 K3	**0 319 327 405**
6350 L3	**0 319 326 213**
6350 L4	**0 319 326 215**
6350 L8	**0 319 327 203**
6350 P0	**0 319 328 213**
6350 P7	**0 319 383 103**
6350 P9	**0 319 383 105**
6350 Q3	**0 319 324 103**
6350 X5	**0 319 382 203**
6350 X8	**0 319 322 203**
6350 X9	**0 319 322 213**
6350 Y5	**0 319 325 203**
6350 Z0	**0 319 321 203**
6351 A0	**0 319 326 204**
6351 A1	**0 319 326 205**
6351 A2	**0 319 326 206**
6351 CA	**0 319 392 206**
6351 CC	**0 319 392 204**
6351 C0	**0 319 329 104**
6351 F7	**0 319 327 404**
6351 H2	**0 319 321 114**
6351 J0	**0 319 321 104**
6351 J5	**0 319 328 204**
6351 K3	**0 319 327 406**
6351 L3	**0 319 326 214**
6351 L4	**0 319 326 216**
6351 L8	**0 319 327 204**
6351 P0	**0 319 328 214**
6351 P7	**0 319 383 104**
6351 P9	**0 319 383 106**
6351 Q3	**0 319 324 104**
6351 X5	**0 319 382 204**
6351 X8	**0 319 322 204**
6351 X9	**0 319 322 214**
6351 Y5	**0 319 325 204**
6351 Z0	**0 319 321 204**
6351 99	**0 319 326 203**
6352 57	**0 319 329 403**
6352 58	**0 319 329 404**
7 543 634	**0 318 014 604**
7 543 635	**0 318 014 603**
7 543 642	**0 318 014 613**
75 443 641	**0 318 014 614**
7 661 822	**0 318 208 203**
76 946 760	**0 318 311 004**
76 946 770	**0 318 311 003**
81550 0H060	**0 319 322 204**
81560 0H060	**0 319 322 203**
92 529 762	**0 318 503 009**
92 561 416	**0 318 433 104**
92 561 417	**0 318 433 103**
95 614 884	**0 319 223 103**
95 614 885	**0 319 223 104**
95 619 509	**0 318 590 009**
95 630 217	**0 319 323 104**
95 630 217	**0 319 323 144**
95 630 219	**0 319 323 103**
95 630 219	**0 319 323 143**
95 644 464	**1 460 109 304**
95 656 547	**0 319 204 203**
95 656 547	**0 319 204 243**
95 656 548	**0 319 204 204**
95 656 548	**0 319 204 244**
95 656 605	**0 319 329 413**
95 656 606	**0 319 329 414**
95 668 023	**0 318 410 003**
95 668 024	**0 318 410 004**
96 054 152	**1 928 300 198**
96 205 043	**0 318 412 004**
96 205 044	**0 318 412 003**
96 253 068	**0 305 054 002**
96 253 069	**0 305 054 001**
96 261 380	**1 928 300 283**
96 261 391	**1 928 300 246**
96 268 585	**0 318 410 014**
96 268 586	**0 318 410 013**
96 351 673	**1 928 300 600**
96 384 979	**0 318 439 009**
96 39 945 880	**0 318 123 714**
96 39 945 980	**0 318 123 713**
96 41 774 580	**0 318 125 714**
96 41 774 680	**0 318 125 713**
96 422 813	**0 318 123 814**
96 422 814	**0 318 123 813**
96 48 446 870	**0 318 012 013**

DAF

112247	**1 450 206 006**
1228151	**2 410 283 010**
1228167	**1 420 283 006**
1228169	**2 916 710 613**
1243641	**1 121 015 015**
1288487	**2 916 710 619**
1322154	**2 916 710 610**
134103	**2 916 710 506**
1344265	**2 916 710 602**
1354501	**1 411 015 097**
136421	**1 300 212 013**
1519516	**0 302 703 001**
1519517	**0 302 703 002**
194190	**2 916 710 613**
194199	**2 440 109 005**
229971	**1 420 283 001**
234209	**2 916 710 619**
242067	**2 916 710 618**
244680	**2 916 710 610**
245186	**2 916 710 601**
245212	**1 410 281 012**
245229	**1 411 015 055**
269519	**0 301 022 701**
269520	**0 301 022 702**
345562	**1 300 212 012**
345563	**1 300 212 010**
537391	**1 000 206 000**
606666	**2 916 730 059**
608059	**0 305 001 005**
608060	**1 305 320 816**
608061	**1 305 320 817**
608062	**1 305 320 818**
616668	**0 305 001 004**
616669	**0 306 001 004**
665210	**0 306 404 001**
698209	**0 306 001 005**
698657	**0 305 001 004**
698671	**1 121 015 011**
699518	**0 305 406 002**
699519	**0 305 406 001**
699520	**0 306 407 002**
699521	**0 306 407 001**
699527	**0 305 603 002**
699528	**0 305 603 001**
699529	**0 306 606 002**
699530	**0 306 606 001**
699538	**1 305 354 935**
699540	**1 305 334 913**
972N11820	**2 916 710 613**

FENDT

F 015 900 020 240	**1 300 212 010**
F 120 904 021 020	**1 305 311 045**
F 139 213 710 130	**1 411 015 052**
F 140 900 020 110	**1 305 501 141**
F 140 900 020 130	**1 305 601 080**
F 140 900 020 150	**1 305 311 910**
F 180 900 020 050	**1 305 543 911**
F 180 900 020 070	**1 305 311 062**
F 281 201 710 040	**2 440 109 005**
F 824 900 010 090	**1 121 015 015**
K 830 160 086	**0 301 204 100**
X 830 160 085	**0 301 204 001**
X 830 160 085 010	**1 305 540 097**
X 830 160 086	**0 301 204 100**
X 830 160 086 010	**1 305 320 892**

FIAT

10172182	**1 928 300 599**
1299823	**1 420 283 001**
1303853080	**0 318 209 204**
1303854080	**0 318 209 203**
1307442080	**0 318 016 814**
1307443080	**0 318 016 813**
1326358080	**0 319 333 204**
1326359080	**0 319 333 203**
1328427080	**0 319 333 214**
1328428080	**0 319 333 213**
1328430080	**0 318 113 714**
1328431080	**0 318 113 713**
1328666080	**0 318 113 814**
1328670080	**0 318 113 816**
1328710080	**0 318 113 813**
1328714080	**0 318 113 815**
1479293080	**0 318 017 814**
1479294080	**0 318 017 813**
1484599080	**0 319 339 104**
1484600080	**0 319 339 103**
42487100	**1 305 365 905**
42487166	**1 305 365 913**
42487167	**1 305 620 468**
42487169	**1 305 620 467**
42488782	**1 305 620 469**
42490109	**1 301 014 203**
42490230	**1 301 014 203**
46401082	**0 318 319 204**
46401083	**0 318 319 203**
46402653	**0 318 029 614**
46402654	**0 318 029 613**
46402655	**0 318 214 004**
46402656	**0 318 214 003**
46402657	**0 318 214 204**
46402658	**0 318 214 203**
46408281	**0 318 235 203**
46408282	**0 318 235 204**
46410622	**0 318 332 214**
46410623	**0 318 332 213**
46411406	**0 318 211 204**
46411407	**0 318 211 203**
46415156	**0 318 431 004**
46415157	**0 318 431 003**
46419122	**0 318 414 003**
46419123	**0 318 414 004**
46434353	**0 318 314 204**
46434354	**0 318 314 203**
46434789	**0 318 323 004**
46434790	**0 318 323 003**
46434791	**0 318 317 014**
46434792	**0 318 317 013**
46437710	**0 318 428 003**
46437711	**0 318 428 004**
46441309	**0 318 215 404**
46441310	**0 318 215 403**
46464114	**F 01C 320 009**
46464114	**1 928 300 641**
46464149	**1 928 300 643**
46472872	**1 928 300 615**
46481416	**0 318 029 814**
46481417	**0 318 029 813**
46511337	**0 318 322 004**
46511339	**0 318 322 003**
46511345	**0 318 033 824**
46511346	**0 318 033 834**
46511351	**0 318 033 823**
46511352	**0 318 033 833**
46511353	**0 318 216 004**
46511355	**0 318 216 003**
46511360	**0 318 216 009**
46523769	**0 319 336 104**
46523770	**0 319 336 103**
46523771	**0 319 336 204**
46523772	**0 319 336 203**
46531593	**0 318 231 204**
46531594	**0 318 231 203**
46531595	**0 318 333 304**
46531596	**0 318 333 204**
46531597	**0 318 333 303**
46531598	**0 318 333 203**
4653160	**0 318 333 214**
46531620	**0 318 333 213**
46537830	**0 318 317 004**
46537831	**0 318 317 003**
46538352	**0 319 334 104**
46538353	**0 319 334 103**
46538354	**0 319 334 114**
46538355	**0 319 334 113**
46540161	**0 318 414 003**
46540162	**0 318 414 004**
46544187	**0 318 334 204**
46544542	**0 318 334 214**
46544543	**0 318 334 203**
46544544	**0 318 334 213**
46710564	**0 318 037 614**
46710863	**0 318 037 613**
46738734	**0 318 350 204**
46738735	**0 318 350 203**
46756280	**0 319 201 404**
46756281	**0 319 201 403**
46758811	**0 318 122 714**
46758849	**0 318 122 713**
46758986	**0 319 338 204**
46758989	**0 319 338 203**
46763860	**0 319 336 114**
46763861	**0 319 336 113**
46763863	**0 319 336 233**
46769166	**0 318 216 204**
46769168	**0 318 216 203**
46777262	**0 318 235 104**
46777263	**0 318 235 103**
46780794	**0 318 122 716**
46780799	**0 318 122 715**
46803093	**0 318 350 204**
46803094	**0 318 350 203**
46817803	**0 319 336 224**
46817804	**0 319 336 223**
46817808	**0 319 336 234**
46823705	**0 319 338 214**
46823706	**0 319 338 213**
46847025	**0 986 BL0 218**
46847026	**0 986 BL0 217**
46847027	**0 986 BL0 216**
46847028	**0 986 BL0 215**
46847029	**0 986 BL0 214**
46847030	**0 986 BL0 213**
4753193	**0 301 017 711**
4753193	**0 301 017 712**
4753953	**0 301 017 711**
4794369	**0 301 017 722**
4794370	**0 301 017 721**
51701589	**0 318 351 123**
51701590	**0 318 351 124**
51703973	**0 318 432 008**
51703974	**0 318 432 007**
51705458	**0 318 318 006**
51705459	**0 318 318 005**
51705460	**0 318 318 016**
51705461	**0 318 318 015**
51708735	**0 318 128 714**
51708736	**0 318 128 713**
51708737	**0 318 128 716**
51708738	**0 318 128 715**
51717077	**0 318 028 814**
51717078	**0 318 028 813**
51717942	**0 319 338 206**
51717943	**0 319 338 205**
51718011	**0 318 351 104**
51718012	**0 318 351 103**
51718013	**0 318 351 113**
51718014	**0 318 351 114**
51718162	**0 318 441 004**
51718163	**0 318 441 003**
51720290	**0 319 337 214**
51720291	**0 319 337 213**
51720552	**0 319 335 104**
51720553	**0 319 335 103**
51721478	**0 319 336 214**
51721478	**0 319 337 204**
51721479	**0 319 336 213**
51721479	**0 319 337 203**
51727249	**0 319 384 106**
51727250	**0 319 384 105**
51727251	**0 319 384 104**
51727252	**0 319 384 103**
51733562	**0 318 133 714**
51733563	**0 318 133 713**
51733566	**0 318 133 574**
51733566	**0 318 133 576**
51733567	**0 318 133 575**
51763006	**0 318 318 008**
51763007	**0 318 318 007**
51764372	**0 319 336 404**
51764373	**0 319 336 403**
51767964	**0 319 336 414**
51767965	**0 319 336 413**
51784693	**0 318 133 576**
51784694	**0 318 133 575**
51786771	**0 318 145 014**
51786772	**0 318 145 013**
51787493	**0 319 387 204**
51787494	**0 319 387 203**
51797995	**0 319 387 206**
51797996	**0 319 387 205**
51801267	**0 318 133 714**
518 0126 80	**0 318 133 713**
51801275	**0 318 133 576**
51801276	**0 318 133 575**
5942654	**0 318 221 003**
5952110	**0 318 038 614**
5952111	**0 318 038 613**
5952112	**0 318 038 604**
5952113	**0 318 038 603**
59952950	**0 318 405 003**
59952960	**0 318 405 004**
60505906	**0 311 322 003**
60505907	**0 311 322 004**
60512704	**1 928 300 191**

◀ FIAT

60512705	**1 928 300 198**
60528053	**0 318 006 614**
60528054	**0 318 006 613**
60534402	**1 928 300 219**
60550697	**0 318 402 003**
60550698	**0 318 402 004**
60579851	**0 318 304 004**
60579852	**0 318 304 003**
60579853	**0 318 304 104**
60579854	**0 318 304 103**
60581544	**0 318 005 614**
60581653	**0 318 401 004**
60581654	**0 318 401 003**
60581748	**0 318 005 613**
60582887	**0 318 203 214**
60582888	**0 318 203 213**
60582889	**0 318 203 014**
60582890	**0 318 203 013**
60585824	**1 928 300 283**
60597296	**0 318 404 004**
60597301	**0 318 306 004**
60597302	**0 318 306 003**
60603944	**0 318 305 004**
60603945	**0 318 305 003**
60608592	**0 318 404 003**
60609910	**0 318 306 104**
60609911	**0 318 306 103**
60610939	**0 318 403 013**
60610940	**0 318 403 014**
60626190	**0 318 007 714**
60626191	**0 318 007 713**
60655592	**F 01C 320 006**
606 7951 60	**0 318 007 774**
606 7951 80	**0 318 007 773**
60684850	**0 318 129 774**
60684851	**0 318 129 773**
60692719	**0 318 490 119**
60695648	**0 318 131 713**
60695649	**0 318 131 714**
60695652	**0 318 131 773**
60695653	**0 318 131 774**
60695976	**0 318 132 714**
60695977	**0 318 132 574**
60695978	**0 318 132 713**
60695979	**0 318 132 573**
60735041	**0 318 490 009**
6074390	**1 230 210 004**
60755008	**1 230 251 010**
608862	**1 410 206 020**
630343	**0 318 209 203**
630344	**0 318 209 204**
705631	**2 440 109 005**
7077041	**9 232 081 463**
7077595	**1 000 207 001**
7079818	**0 986 BL0 302**
7079819	**0 986 BL0 301**
7080410	**1 000 206 000**
7083962	**0 986 BL0 206**
7083964	**0 986 BL0 205**
7083966	**0 986 BL0 210**
7083968	**0 986 BL0 209**
7083970	**0 986 BL0 208**
7083972	**0 986 BL0 207**
7112550	**2 440 109 005**
71315991	**1 301 015 115**
716 0800 99	**0 318 428 004**
716 0810 99	**0 318 428 003**
71716583	**1 928 300 737**
71716584	**1 928 300 740**
722441	**2 916 710 613**
75204290	**2 916 710 613**
75204364	**2 916 710 602**
7531770	**2 916 710 602**
753605	**2 916 710 616**
7538302	**0 318 221 204**
7538396	**0 318 221 204**
7543634	**0 318 014 604**
7543635	**0 318 014 603**
7543642	**0 318 014 613**
75443641	**0 318 014 614**
7572849	**0 318 221 003**
758707	**2 916 710 601**
7592548	**0 318 325 204**
7592553	**0 318 325 203**
7595137	**0 318 219 003**
7595148	**0 318 219 004**
7595156	**0 318 219 203**
7595162	**0 318 219 204**
7617348	**0 318 036 614**
7617349	**0 318 036 613**
7629357	**0 318 314 004**
7629358	**0 318 314 003**
7629825	**0 318 211 004**
7629826	**0 318 211 003**
76327130	**0 318 406 003**
76327140	**0 318 406 004**
764332	**2 916 710 619**
764394	**2 916 710 615**
7645631	**0 318 417 003**
7646158	**0 318 417 004**
7661821	**0 318 208 204**
7661822	**0 318 208 203**
766567	**1 410 206 021**
766568	**1 410 206 022**
7669959	**0 318 021 614**
7674699	**0 318 421 003**
768780	**1 420 283 001**
76946760	**0 318 311 004**
76946770	**0 318 311 003**
7699750	**0 318 421 004**
7700413	**0 318 326 203**
7700414	**0 318 326 204**
7701042070	**1 460 283 311**
770244	**2 916 710 610**
770341	**1 411 015 052**
770466	**1 411 015 054**
772050	**2 916 710 601**
7720510	**2 916 710 602**
7730046	**0 318 324 204**
7730047	**0 318 324 203**
7732370	**0 318 415 004**
7732371	**0 318 415 003**
77362094	**0 307 853 303**
77363756	**F 01C 320 027**
7753182	**0 318 407 003**
7753183	**0 318 407 004**
7762887	**0 318 417 013**
7762888	**0 318 417 014**
7762889	**0 318 419 003**
7762890	**0 318 419 004**
7767729	**0 318 313 204**
7767730	**0 318 313 203**
7788060	**0 318 332 204**
7788061	**0 318 332 203**
7788062	**0 318 332 304**
7788063	**0 318 332 303**
7795368	**0 318 490 029**
7799496	**0 318 413 014**
7799497	**0 318 413 013**
79023949	**2 916 710 517**
79038471	**2 916 710 618**
79038472	**2 916 710 610**
79045965	**2 916 730 059**
79045967	**2 916 710 509**
79046212	**2 916 710 613**
79047102	**1 420 283 001**
79058499	**1 330 290 700**
82405417	**0 318 212 204**
82405418	**0 318 212 203**
82418607	**0 318 023 614**
82418608	**0 318 023 613**
82418609	**0 318 023 624**
82418610	**0 318 023 623**
82418611	**0 318 023 814**
82418612	**0 318 023 813**
82426526	**0 318 501 004**
82426527	**0 318 501 003**
82437385	**0 318 413 003**
82437386	**0 318 413 004**
82439504	**0 318 501 014**
82439505	**0 318 501 013**
82439506	**0 318 426 014**
82439507	**0 318 426 013**
82444924	**0 318 429 004**
82444927	**0 318 429 003**
82451842	**0 318 425 004**
82451843	**0 318 425 003**
82466226	**0 315 110 004**
82466227	**0 315 110 003**
82474094	**0 318 430 003**
82474095	**0 318 430 004**
82474096	**0 318 234 203**
82474097	**0 318 234 204**
82489683	**0 318 427 004**
82489684	**0 318 427 003**
9001871	**1 411 015 053**
9002306	**2 916 730 059**
9007840	**1 420 283 001**
9008562	**2 916 710 608**
9008563	**2 916 710 602**
9009104	**1 411 015 055**
9009581	**2 916 710 610**
9406303537	**0 318 210 204**
9406303547	**0 318 210 203**
96205043	**0 318 412 004**
96205044	**0 318 412 003**
96585950	**0 318 004 613**
96585950	**0 318 004 614**
9918623	**2 916 710 608**
9922270	**2 916 710 645**
9922330	**2 916 710 517**
9925005	**2 916 710 509**
9929178	**2 916 710 618**
9929215	**2 916 710 610**
9929742	**2 916 710 602**
9930050	**2 440 109 005**
9934331	**2 916 710 517**
9938018	**1 987 306 208**
9938019	**1 987 306 207**
9939430	**2 916 710 517**
9940382	**1 987 306 212**
9940383	**1 987 306 211**
9940603	**1 987 306 206**
9940604	**1 987 306 205**
9940626	**1 987 306 214**
9940627	**1 987 306 213**
9941001	**1 000 207 001**
9943062	**0 318 218 204**
9943063	**0 318 218 203**
9943193	**0 318 222 204**
9943194	**0 318 222 203**
9943195	**0 318 222 004**
9943196	**0 318 222 003**
9944729	**1 305 621 983**
9944732	**1 305 621 984**
9945021	**0 318 206 204**
9945022	**0 318 206 203**
9945150	**0 318 039 614**
9945151	**0 318 039 613**
9945366	**1 305 621 991**

F

9945368	**1 305 621 992**
9945369	**1 305 321 809**
9945578	**1 305 621 803**
9945870	**1 305 540 229**
9945871	**1 305 540 227**
9946312	**1 460 283 306**
9946960	**1 305 321 806**
9946961	**1 305 321 807**
9946962	**1 305 321 802**
9946963	**1 305 321 803**
9947116	**1 450 206 022**
9947364	**1 460 283 311**
9947364	**2 460 283 001**
9951051	**1 450 206 022**
9957969	**2 916 710 618**
9958765	**2 916 710 615**
9982656	**2 916 710 517**
9984543	**1 301 015 059**
9984544	**1 301 014 203**
9984546	**1 305 365 906**

FORD

A72SX 13K005 G	**0 301 013 101**
A72SX 13K005 GA	**0 301 013 101**
D92VB 13K198 AA	**0 307 851 316**
E5HN 9P630 AA	**2 916 710 610**
E 830223 S	**2 916 710 517**
E 830279 S	**2 916 710 618**
E 836240 S	**2 916 710 602**
LF 13K005 B	**0 301 709 601**
V97FB 13K198 AA	**0 307 853 302**
XS4X1 3A602 AD	**0 986 702 272**
XS4X1 3A602 BC	**0 986 703 132**
XS4X1 3A602 BD	**0 986 703 132**
XS4X1 3A602 CB	**0 986 702 132**
XS4X1 3A602 CD	**0 986 702 132**
XS4X1 3A602 GC	**0 986 704 132**
XS4X1 3A602 GD	**0 986 704 132**
XS4X1 3A602 HC	**0 986 704 034**
XS4X1 3A602 HD	**0 986 704 034**
XS4X1 3A603 AD	**0 986 702 271**
XS4X1 3A603 BC	**0 986 703 131**
XS4X1 3A603 BD	**0 986 703 131**
XS4X1 3A603 CB	**0 986 702 131**
XS4X1 3A603 CD	**0 986 702 131**
XS4X1 3A603 GC	**0 986 704 131**
XS4X1 3A603 GD	**0 986 704 131**
XS4X1 3A603 HC	**0 986 704 033**
XS4X1 3A603 HD	**0 986 704 033**
XS4X1 3K285 AF	**0 986 701 121**
XS4X1 3K384 AE	**0 986 701 122**
XS4X1 3K384 AF	**0 986 701 122**
XS4X1 3K385 AE	**0 986 701 121**
XS4X1 3K385 AF	**0 986 701 121**
XS4X1 3369 AA	**0 986 701 121**
XS4X1 3404 AD	**0 986 702 132**
XS4X1 3404 BD	**0 986 703 132**
XS4X1 3404 ED	**0 986 704 132**
XS4X1 3404 FD	**0 986 704 034**
XS4X1 3405 AD	**0 986 702 131**
XS4X1 3405 BD	**0 986 703 131**
XS4X1 3405 ED	**0 986 704 131**
XS4X1 3405 FD	**0 986 704 033**
XS4X1 5K258 AA	**0 986 701 042**
XS4X1 5K258 AE	**0 986 701 042**
XS4X1 5K258 AF	**0 986 701 042**
XS4X1 5K274 AA	**0 986 701 041**
XS4X1 5K274 AE	**0 986 701 041**
XS4X1 5K274 AF	**0 986 701 041**
XS4X1 5511 AD	**0 986 702 062**
XS4X1 5512 AD	**0 986 702 061**
XS411 3A602 AE	**0 986 702 132**
XS411 3A602 BC	**0 986 703 132**
XS411 3A602 EC	**0 986 704 132**
XS411 3A602 EE	**0 986 704 132**
XS411 3A602 FC	**0 986 704 034**
XS411 3A602 FE	**0 986 704 034**
XS411 3A603 AE	**0 986 702 131**
XS411 3A603 BC	**0 986 703 131**
XS411 3A603 EC	**0 986 704 131**
XS411 3A603 EE	**0 986 704 131**
XS411 3A603 FC	**0 986 704 033**
XS411 3A603 FE	**0 986 704 033**
YS4X1 3A603 AD	**0 986 702 271**
YS4X1 5K272 AB	**0 986 702 272**
YS4X1 5K273 AB	**0 986 702 271**
YS4X1 5500 AB	**0 986 702 062**
YS4X1 5501 AC	**0 986 702 061**
YS4X1 5511 AC	**0 986 702 062**
YS4X1 5512 AC	**0 986 702 061**
YS4X1 5512 AD	**0 986 702 061**
YS711 3A603 AH	**0 986 703 132**
YU3X 13K069 CAA	**0 307 853 303**
YU3X 13K198 AAA	**0 307 853 303**
YU3X 13K198 AAA	**0 307 853 306**
Y95VW 13368 AD	**0 311 325 002**
Y95VW 13368 AE	**0 311 325 001**
Y95VW 13368 AE	**0 311 325 002**
Y95VW 13368 AF	**0 311 325 002**
Y95VW 13369 AD	**0 311 325 001**
Y95VW 13369 AE	**0 311 325 001**
Y95VW 13369 AF	**0 311 325 001**
ZBC 911499	**1 000 207 001**
026 905 243.1	**1 230 210 017**
026 905 243.3	**9 231 081 028**
043 748	**1 305 320 852**
043 751	**1 305 620 260**
043 752	**1 305 620 256**
1M511 3A602 AA	**0 986 702 132**
1M511 3A602 AB	**0 986 702 132**
1M511 3A602 BA	**0 986 703 132**
1M511 3A602 EA	**0 986 704 132**
1M511 3A603 AA	**0 986 702 131**
1M511 3A603 AB	**0 986 702 131**
1M511 3A603 BA	**0 986 703 131**
1M511 5511 AA	**0 986 702 062**
1M511 5512 AA	**0 986 702 061**
1M511 6A602 AA	**0 986 702 132**
1M511 6A603 AB	**0 986 702 131**
1S711 5K201 AB	**0 305 062 004**
1S711 5K201 AC	**0 305 062 004**
1S711 5K202 AB	**0 305 062 003**
1S711 5K202 AC	**0 305 062 003**
1S711 5K205 AA	**0 305 062 004**
1S711 5K206 AA	**0 305 062 003**
1S711 5K206 AE	**0 305 062 003**
1S715 K205 AA	**0 305 062 004**
1003629	**1 305 615 028**
1003651	**1 305 615 029**
1003656	**1 301 014 310**
1003862	**0 307 851 417**
1003866	**0 307 852 314**
1005679	**0 301 048 712**
1005705	**0 301 048 711**
1008239	**1 305 321 848**
1008241	**1 305 321 847**
1018573	**0 315 202 010**
1021146	**0 318 045 524**
1021153	**0 318 045 523**
1025202	**0 301 045 404**
1025446	**0 301 045 403**
1029080	**0 307 853 301**
1034020	**0 301 045 404**
1034025	**0 301 045 403**
1036410	**1 301 014 291**
1038443	**0 307 853 302**
1041633	**0 311 325 001**
1041634	**0 311 325 002**
1041664	**0 307 853 304**
1042841	**1 305 615 907**
1042842	**1 305 615 906**
1044103	**0 986 707 032**
1044104	**0 986 707 031**
1054240	**0 986 707 022**
1054241	**0 986 707 021**
1056360	**0 301 045 404**
1056365	**0 301 045 604**
1056372	**0 301 045 403**
1056373	**0 301 045 603**
1056374	**1 301 014 292**
1056378	**0 301 045 614**
1056381	**0 301 045 613**
1063533	**0 986 707 022**
1063534	**0 986 707 021**
1064133	**0 301 045 604**
1064136	**0 301 045 614**
1064139	**0 301 045 603**
1064142	**0 301 045 613**
1067264	**0 986 702 271**
1067265	**0 986 702 272**
1067267	**0 986 701 122**
1067268	**0 986 701 121**
1068161	**0 311 325 001**
1068161	**0 311 325 002**
1068162	**0 311 325 001**
1068265	**0 986 702 062**
1069265	**0 986 702 062**
1069266	**0 986 702 061**
1070832	**0 986 703 132**
1070833	**0 986 704 132**
1070835	**0 986 704 034**
1070837	**0 986 703 131**
1070838	**0 986 704 131**
1070839	**0 986 704 033**
1072423	**0 986 707 032**
1072424	**0 986 707 031**
1076373	**0 986 702 132**
1076374	**0 986 702 131**
1084737	**0 986 701 041**
1084738	**0 986 701 042**
1085653	**0 986 704 132**
1085655	**0 986 704 034**
1085660	**0 986 704 131**
1085665	**0 986 704 033**
1092586	**0 986 702 132**
1092589	**0 986 702 131**
1098043	**0 986 703 132**
1098056	**0 986 704 132**
1098064	**0 986 704 034**
1098086	**0 986 703 131**
1098786	**0 986 704 131**
1098788	**0 986 704 033**
1100888	**0 315 202 010**
1104276	**0 986 701 122**
1104277	**0 986 701 121**
1106724	**0 986 702 061**
1115532	**0 305 062 004**
1115534	**0 305 062 003**
1119440	**0 986 703 131**
1119441	**0 986 703 132**
1119442	**0 986 703 131**
1120245	**0 986 704 132**
1120246	**0 986 704 034**
1120247	**0 986 704 131**
1120248	**0 986 704 033**
1120616	**0 986 702 132**
1120617	**0 986 702 131**
1124570	**0 986 702 062**
1126654	**0 305 062 004**
1126982	**0 305 062 003**

◀ FORD

1130814	**0 986 702 061**
1134300	**0 986 701 042**
1134301	**0 986 701 041**
1138142	**0 986 702 062**
1138143	**0 986 702 061**
1143437	**0 986 702 132**
1143438	**0 986 702 131**
1148289	**0 986 704 132**
1150021	**0 986 703 132**
1150022	**0 986 703 131**
11 557 028	**1 305 320 111**
11 708 141	**1 305 320 920**
11 708 938	**1 305 620 057**
11 708 939	**1 305 620 058**
1214223	**0 986 702 131**
1214226	**0 986 702 132**
1318743	**0 318 440 004**
1318744	**0 318 440 003**
1489912	**0 305 081 004**
1489913	**0 305 081 003**
1514688	**1 410 281 012**
1536483	**0 301 013 101**
1548391	**2 916 710 517**
1599241	**2 440 109 005**
3S511 5K201 BB	**0 318 440 004**
3S511 5K202 BB	**0 318 440 003**
3S711 5K201 AA	**0 305 068 002**
3S711 5K202 AA	**0 305 068 001**
3S715 K205 AC	**0 305 068 004**
3S715 K206 AC	**0 305 068 003**
32782600 AAO	**0 318 440 004**
32782601 AAO	**0 318 440 003**
438 603	**0 305 600 001**
557 528	**1 305 320 111**
6043742	**1 305 620 253**
6043744	**1 305 620 257**
6043745	**1 305 620 265**
6043747	**1 301 015 105**
6047358	**1 301 015 104**
6047360	**1 305 320 855**
6047983	**0 305 601 103**
6084703	**0 306 001 005**
6084704	**0 305 001 004**
6084705	**0 305 001 005**
6116116	**0 305 601 103**
6124202	**1 305 621 013**
6124203	**1 305 621 015**
6124204	**1 305 621 009**
6124205	**1 305 621 011**
6124207	**1 301 014 217**
6124211	**1 305 363 957**
6124223	**1 305 621 012**
6124224	**1 305 621 014**
6124225	**1 305 621 008**
6124226	**1 305 621 010**
6124227	**1 305 363 956**
6124229	**1 305 320 716**
6131841	**1 305 621 015**
6135152	**2 916 710 602**
6149115	**1 305 543 939**
6156386	**1 305 621 110**
6156387	**1 987 306 033**
6156393	**1 305 320 755**
6156401	**1 305 621 109**
6156402	**1 987 306 032**
6156405	**1 305 320 754**
6165669	**0 318 047 614**
6165670	**0 318 047 613**
6167996	**1 301 014 225**
6189559	**0 307 851 303**
6189725	**1 305 321 937**
6189727	**1 305 321 936**
6189874	**0 307 851 308**
6199126	**0 307 851 307**
6199765	**0 307 851 302**
6484653	**0 307 851 304**
6509453	**1 305 621 443**
6509454	**1 305 621 445**
6509455	**1 301 014 218**
6509456	**1 305 621 442**
6509457	**1 305 621 444**
6509458	**1 305 321 959**
6509461	**1 305 321 960**
6509462	**1 305 321 962**
6617464	**0 307 851 329**
6617465	**0 307 851 330**
6759714	**0 307 851 316**
6926913	**0 307 852 306**
6991957	**0 307 852 305**
7S711 5K201 AC	**0 305 081 004**
7S711 5K202 AC	**0 305 081 003**
703F 9C578 ABA	**1 411 015 055**
703F 9P631 AAA	**2 916 710 602**
7030700	**1 305 615 905**
7030707	**1 305 615 025**
7030707	**1 305 615 904**
7030708	**1 305 321 839**
7030708	**1 305 321 959**
7030709	**1 305 321 841**
7030713	**1 305 321 840**
7030714	**1 305 321 842**
7030721	**0 301 045 404**
708 998	**0 302 353 006**
708 999	**0 302 353 005**
7117875	**0 318 045 514**
7117881	**0 318 045 513**
715F 9E573 ABA	**1 410 281 012**
7189112	**0 307 851 419**
7396644	**1 305 621 656**
7396645	**1 305 621 658**
7396646	**1 301 014 249**
7396652	**1 305 621 655**
7396653	**1 305 621 657**
7396654	**0 307 852 312**
78GG 13K182 BA	**1 305 620 260**
78GG 13K182 CA	**1 305 620 256**
78GG 13N114 AA	**1 305 320 852**
78GG 13N114 DA	**1 305 320 855**
78GG 13060 AA	**1 305 620 253**
78GG 13060 CA	**1 305 620 257**
78GG 13060 DA	**1 305 620 265**
78GG 13066 AA	**1 301 015 105**
78GG 13066 BA	**1 301 015 104**
78GG 15K201 BA	**0 305 601 103**
81DB 15200 BA	**0 306 001 005**
81DB 15201 AA	**0 305 001 004**
81DB 15201 BA	**0 305 001 005**
813F 9364 AA	**2 440 109 005**
82GG 15K201 BA	**0 305 601 103**
85GG 13K060 BA	**1 305 621 015**
85GG 13K182 AA	**1 305 621 008**
85GG 13K182 AA	**1 305 621 012**
85GG 13K182 BA	**1 305 621 014**
85GG 13K182 CA	**1 305 621 008**
85GG 13K182 CA	**1 305 621 012**
85GG 13K182 DA	**1 305 621 010**
85GG 13K183 AA	**1 305 363 956**
85GG 13K183 CA	**1 305 320 716**
85GG 13N114 AA	**1 305 363 957**
85GG 13060 AA	**1 305 621 009**
85GG 13060 AA	**1 305 621 013**
85GG 13060 BA	**1 305 621 015**
85GG 13060 CA	**1 305 621 009**
85GG 13060 CA	**1 305 621 013**
85GG 13060 DA	**1 305 621 011**
85GG 13066 AA	**1 301 014 217**
86BG 13005 D2A	**0 318 047 614**
86BG 13006 D2A	**0 318 047 613**
86FG 10930 AA	**1 928 300 191**
87BG 13K182 CA	**1 305 621 109**
87BG 13K182 DA	**1 987 306 032**
87BG 13K183 CA	**1 305 320 754**
87BG 13K183 JA	**1 305 321 936**
87BG 13N114 CA	**1 305 320 755**
87BG 13N114 JA	**1 305 321 937**
87BG 13060 CA	**1 305 621 110**
87BG 13060 DA	**1 987 306 033**
87BG 13066 CA	**1 301 014 225**
87GG 4603 AA	**1 928 300 182**
90AG 13K198 AA	**0 307 851 303**
90FG 13K198 AA	**0 307 851 308**
90FG 13K198 BA	**0 307 851 307**
90VB 13K198 AA	**0 307 851 302**
90VB 13K198 AB	**0 307 851 302**
91AG 13K198 AA	**0 307 851 304**
91BG 13K198 AA	**0 307 851 329**
91BG 13K198 BA	**0 307 851 330**
92GG 13K182 AA	**1 305 621 442**
92GG 13K182 BA	**1 305 621 444**
92GG 13K183 AA	**1 305 321 959**
92GG 13K198 AA	**0 307 851 318**
92GG 13N114 AA	**1 305 321 960**
92GG 13N114 BA	**1 305 321 962**
92GG 13060 AA	**1 305 621 443**
92GG 13060 BA	**1 305 621 445**
92GG 13066 AA	**1 301 014 218**
92VB 13K198 AA	**0 307 851 316**
92VB 13K198 AB	**0 307 851 316**
93BG 13005 SEE	**0 318 045 514**
93BG 13006 SEE	**0 318 045 513**
94AG 13K198 AA	**0 307 852 305**
94GG 13K198 AA	**0 307 852 306**
95AG 13K069 AA	**0 307 851 419**
95BG 13005 SEA	**0 318 045 524**
95BG 13006 SEA	**0 318 045 523**
95GB F501A04 DJDCD1	**0 986 702 062**
95GG 13K182 AA	**1 305 615 025**
95GG 13K182 AA	**1 305 615 904**
95GG 13K183 AA	**1 305 321 839**
95GG 13K183 AA	**1 305 321 959**
95GG 13K183 BA	**1 305 321 841**
95GG 13N114 AA	**1 305 321 840**
95GG 13N114 BA	**1 305 321 842**
95GG 13005 SCA	**0 301 045 404**
95GG 13005 SCD	**0 301 045 404**
95GG 13005 SCF	**0 301 045 404**
95GG 13005 SCG	**0 301 045 404**
95GG 13005 SDA	**0 301 045 604**
95GG 13005 SDD	**0 301 045 604**
95GG 13005 SDF	**0 301 045 604**
95GG 13005 SDG	**0 301 045 604**
95GG 13006 SCA	**0 301 045 403**
95GG 13006 SCD	**0 301 045 403**
95GG 13006 SCF	**0 301 045 403**
95GG 13006 SCG	**0 301 045 403**
95GG 13006 SDA	**0 301 045 603**
95GG 13006 SDD	**0 301 045 603**
95GG 13006 SDF	**0 301 045 603**
95GG 13006 SDG	**0 301 045 603**
95GG 13060 AA	**1 305 615 905**
95GG 13060 AAA	**1 305 615 024**
95GG 13066 AA	**1 301 014 258**
95GG 13066 AB	**1 301 014 292**
95VG 1304 AB	**0 986 707 032**
95VG 13368 AC	**0 986 707 022**
95VG 13369 AC	**0 986 707 021**
95VG 13404 AB	**0 986 707 032**
95VG 13404 AC	**0 986 707 032**
95VG 13405 AB	**0 986 707 031**
95VG 13405 AC	**0 986 707 031**

F

95VW 13K182 CA	**1 305 621 655**
95VW 13K182 DA	**1 305 621 657**
95VW 13K193 AA	**0 307 852 312**
95VW 13K193 CA	**0 307 853 304**
95VW 13005 HB	**0 301 048 701**
95VW 13005 HD	**0 301 048 701**
95VW 13005 HE	**0 301 048 701**
95VW 13005 NB	**0 301 048 701**
95VW 13005 NC	**0 301 048 701**
95VW 13005 ND	**0 301 048 701**
95VW 13005 SB	**0 301 048 711**
95VW 13005 SC	**0 301 048 711**
95VW 13005 SD	**0 301 048 711**
95VW 13005 VA	**0 301 048 711**
95VW 13005 VB	**0 301 048 711**
95VW 13005 VC	**0 301 048 711**
95VW 13005 VD	**0 301 048 711**
95VW 13006 HB	**0 301 048 702**
95VW 13006 HD	**0 301 048 702**
95VW 13006 HE	**0 301 048 702**
95VW 13006 NB	**0 301 048 702**
95VW 13006 NC	**0 301 048 702**
95VW 13006 ND	**0 301 048 702**
95VW 13006 SB	**0 301 048 712**
95VW 13006 SC	**0 301 048 712**
95VW 13006 SD	**0 301 048 712**
95VW 13006 VA	**0 301 048 712**
95VW 13006 VB	**0 301 048 712**
95VW 13006 VC	**0 301 048 712**
95VW 13006 VD	**0 301 048 712**
95VW 13027 CA	**1 305 321 848**
95VW 13027 CAA	**1 305 321 848**
95VW 13028 CA	**1 305 321 847**
95VW 13060 CA	**1 305 621 656**
95VW 13060 DA	**1 305 621 658**
95VW 13066 AA	**1 301 014 249**
95VW 13368 AC	**0 311 325 002**
95VW 13368 AD	**0 311 325 002**
95VW 13369 AC	**0 311 325 001**
95VW 13369 AD	**0 311 325 001**
96BG 13066 CA	**1 301 014 291**
96FB 13A278 AC	**0 315 202 010**
96FB 13A278 AD	**0 315 202 010**
96FG 13A278 AA	**0 315 202 010**
96FG 13A278 AB	**0 315 202 010**
96FG 13K069 AA	**0 307 851 417**
96FG 13K182 CA	**1 305 615 028**
96FG 13K198 AA	**0 307 852 314**
96FG 13060 CA	**1 305 615 029**
96FG 13066 AA	**1 301 014 310**
97BG 13K198 AA	**0 307 853 301**
97VX 13368 AA	**0 986 707 022**
97VX 13369 AA	**0 986 707 021**
98GG 13K182 AA	**1 305 615 906**
98GG 13005 SDC	**0 301 045 614**
98GG 13005 SDD	**0 301 045 614**
98GG 13006 SDC	**0 301 045 613**
98GG 13006 SDD	**0 301 045 613**
98GG 13060 AA	**1 305 615 907**

HELLA

1AA 004 109-007	**0 301 204 001**
1AA 004 109-021	**0 301 204 100**
1AA 004 109-031	**0 301 204 001**
1AA 004 109-031	**0 301 204 002**
1AA 004 109-041	**0 301 204 101**
1AA 127 473-015	**1 305 320 892**
1AA 127 474-015	**1 305 320 893**
1AB 003 177-801	**0 301 709 800**
1AB 005 444-001	**0 301 711 101**
1AB 005 444-007	**0 301 204 001**
1AE 004 234-001	**0 301 710 100**
1AE 006 659-111	**1 307 022 101**
1AE 006 659-111	**1 307 022 105**
1AE 006 659-121	**1 307 022 102**
1AE 006 659-121	**1 307 022 106**
1AF 004 776-111	**1 307 022 021**
1AF 004 776-121	**1 307 022 022**
1AF 004 776-211	**1 307 022 039**
1AF 004 776-221	**1 307 022 040**
1AG 003 480-391	**1 305 355 931**
1AG 003 480-401	**1 305 355 932**
1AG 004 580-151	**1 307 022 037**
1AG 004 580-161	**1 307 022 038**
1AG 122 058-001	**1 305 355 930**
1AG 122 059-001	**1 305 355 929**
1AG 129 115-021	**1 305 355 933**
1AG 129 116-021	**1 305 355 934**
1AH 004 089-071	**1 307 022 005**
1AH 004 089-081	**1 307 022 006**
1AH 004 089-291	**1 307 022 025**
1AH 004 089-301	**1 307 022 026**
1AH 005 295-131	**1 307 022 054**
1AH 005 295-141	**1 307 022 055**
1AJ 003 075-497	**1 307 022 909**
1AJ 003 075-507	**1 307 022 910**
1AJ 003 075-517	**1 307 022 907**
1AJ 003 075-527	**1 307 022 908**
1AJ 006 078-011	**1 307 022 066**
1AJ 006 078-021	**1 307 022 067**
1AJ 006 078-051	**1 307 022 070**
1AJ 006 078-061	**1 307 022 071**
1A3 002 850-001	**0 301 302 100**
1A3 002 850-001	**0 301 302 101**
1A3 002 850-031	**0 301 302 102**
1A3 002 850-801	**0 301 302 801**
1A3 002 850-821	**0 301 302 802**
1A3 005 760-501	**0 301 304 100**
1A5 003 178-411	**0 301 304 100**
1A5 003 178-411	**0 301 680 101**
1A5 118 740-001	**1 305 303 964**
1A6 001 129-007	**0 301 603 100**
1A8 121 150-001	**1 305 303 961**
1A8 122 580-001	**1 305 303 958**
1A9 001 158-017	**0 301 807 002**
1B3 126 677-041	**1 305 331 902**
1B3 126 677-045	**1 305 331 902**
1B3 126 677-05	**1 305 331 901**
1B3 126 677-051	**1 305 331 901**
1B3 126 677-055	**1 305 331 901**
1B3 128 267-001	**0 301 202 003**
1D9 007 095-091	**0 986 310 203**
1D9 007 095-094	**0 986 310 203**
1EE 008 050-011	**1 307 022 194**
1EE 008 050-021	**1 307 022 195**
1EE 008 685-011	**1 307 022 194**
1EE 008 685-021	**1 307 022 195**
1EJ 003 050-171	**1 307 022 913**
1EJ 003 050-181	**1 307 022 914**
1EJ 004 440-591	**1 307 022 111**
1EJ 004 440-601	**1 307 022 112**
1FB 005 860-031	**0 306 407 001**
1FB 005 860-831	**0 306 407 903**
1FD 135 198-011	**1 305 354 935**
1FE 002 537-031	**0 305 001 005**
1FE 006 300-041	**0 306 001 004**
1F3 002 425-001	**0 301 303 010**
1F3 002 425-011	**0 301 303 028**
1F3 002 818-017	**0 301 303 015**
1F3 002 850-071	**0 301 302 103**
1F3 114 155-001	**0 301 303 028**
1F3 126 046-00	**1 305 331 903**
1F4 005 750-011	**0 306 606 001**
1F4 005 750-051	**0 306 606 002**
1F4 005 750-811	**0 306 606 901**
1F7 004 700-301	**0 306 901 005**
1F9 003 674-411	**0 306 900 003**
1K3 002 425-001	**0 301 303 010**
1K3 002 425-011	**0 301 303 010**
1K3 114 155-001	**0 301 303 028**
1K3 114 155-001	**0 301 303 034**
1K3 114 185-001	**0 301 303 010**
1K3 126 046-001	**1 305 331 903**
1K3 126 680-001	**1 305 331 904**
1K3 126 680-005	**1 305 331 904**
1K3 134 855-011	**1 305 331 909**
1K3 134 855-015	**1 305 331 909**
1K3 134 856-011	**1 305 331 910**
1LB 003 177-081	**0 301 709 600**
1LB 003 177-087	**0 301 709 600**
1LB 003 177-165	**0 301 709 601**
1LE 003 427-041	**0 301 019 601**
1LE 003 427-051	**0 301 019 600**
1LE 003 440-057	**0 301 021 401**
1LE 003 440-067	**0 301 021 402**
1LF 004 766-031	**0 301 020 601**
1LF 004 766-041	**0 301 020 602**
1LF 004 776-131	**1 307 022 023**
1LF 004 776-141	**1 307 022 024**
1LF 004 776-231	**1 307 022 041**
1LF 004 776-241	**1 307 022 042**
1LG 003 434-187	**0 301 017 602**
1LH 005 148-031	**0 301 025 603**
1LH 005 148-041	**0 301 025 604**
1L3 002 850-061	**0 301 302 602**
1L3 004 105-057	**0 301 351 505**
1L3 004 105-067	**0 301 351 506**
1L3 004 105-307	**0 301 351 508**
1L3 004 105-531	**0 301 351 505**
1L3 004 105-531	**0 301 351 507**
1L3 004 105-541	**0 301 351 508**
1L6 001 128-141	**0 301 600 506**
1L6 002 395-128	**0 301 600 606**
1L6 002 395-131	**0 301 600 605**
1L6 003 778-021	**0 301 400 608**
1L8 001 149-271	**0 301 801 510**
1L8 003 060-615	**0 301 608 611**
1L8 003 060-691	**0 301 608 611**
1L8 004 190-085	**0 301 608 613**
1L8 004 190-111	**0 301 608 613**
1L9 007 095-111	**0 986 310 205**
1L9 007 095-114	**0 986 310 205**
1L9 007 095-121	**0 986 310 206**
1L9 007 095-124	**0 986 310 206**
1M3 002 426-011	**0 301 303 550**
1NA 007 133-001	**0 305 055 001**
1NA 008 631-011	**0 986 701 041**
1NA 008 631-021	**0 986 701 042**
1NA 010 059-011	**0 305 077 001**
1NA 010 059-021	**0 305 077 002**
1NB 005 860-001	**0 305 406 001**
1ND 003 590-001	**0 305 402 001**
1ND 005 700-021	**0 305 406 002**
1ND 005 700-041	**0 305 406 001**
1ND 005 700-841	**0 305 406 901**
1NE 002 537-017	**0 305 001 004**
1NE 006 300-051	**0 305 001 004**
1NL 006 580-061	**0 305 120 106**
1NO 010 163-011	**0 305 066 001**
1NO 010 163-021	**0 305 066 002**
1NO 010 164-011	**0 305 060 003**
1NO 010 164-021	**0 305 060 004**
1N0 010 049-011	**0 305 063 003**
1N0 010 049-021	**0 305 063 004**
1N0 010 058-011	**0 305 076 001**
1N0 010 058-021	**0 305 076 002**
1N0 010 067-011	**0 305 060 001**
1N0 010 067-021	**0 305 060 002**
1N4 005 750-001	**0 305 603 001**

◀ HELLA

1N4 005 750-041	**0 305 603 002**
1N4 005 750-801	**0 305 603 901**
1N4 135 224-011	**1 305 334 913**
1S5 003 178-031	**0 300 181 003**
1S5 003 178-431	**0 300 181 003**
1S6 001 129-031	**0 300 682 001**
1T0 001 475-001	**0 301 304 100**
2BA 003 110-011	**1 305 233 051**
2BA 003 110-021	**1 305 233 052**
2BA 003 504-051	**1 305 230 901**
2BA 003 504-061	**1 305 230 902**
2BA 003 734-001	**0 311 316 004**
2BA 003 734-051	**0 311 316 003**
2BA 003 734-051	**0 311 316 007**
2BA 003 734-061	**0 311 316 003**
2BA 003 734-061	**0 311 316 004**
2BA 004 257-011	**1 305 232 911**
2BA 004 257-021	**1 305 232 912**
2BA 006 091-011	**1 305 231 028**
2BA 006 091-021	**1 305 231 029**
2BA 006 749-071	**0 318 214 003**
2BA 006 749-071	**0 318 214 203**
2BA 006 749-081	**0 318 214 004**
2BA 006 749-081	**0 318 214 204**
2BA 007 222-011	**0 318 221 003**
2BA 007 222-021	**0 318 221 004**
2BA 008 404-011	**0 311 328 001**
2BA 008 404-021	**0 311 328 002**
2BA 008 404-031	**0 311 328 003**
2BA 008 404-041	**0 311 328 004**
2BM 003 933-031	**0 319 601 114**
2BM 003 933-041	**0 319 601 113**
2NE 001 412-091	**0 313 103 006**
2NE 001 412-091	**0 313 103 901**
2NE 001 412-841	**0 313 103 901**
2NE 001 412-851	**0 313 103 901**
2NE 003 030-151	**0 313 108 001**
2NE 003 734-091	**0 313 110 002**
2PF 003 734-031	**0 315 104 027**
2SA 003 734-021	**0 313 050 005**
2SA 003 734-121	**0 313 050 005**
2SD 001 686-101	**0 311 424 004**
2SD 003 167-021	**0 311 425 002**
2SE 001 686-142	**0 311 424 003**
2SE 003 167-031	**0 311 425 001**
2SE 003 167-041	**0 311 425 001**
2VA 965 303-071	**0 319 363 203**
2VP 965 303-081	**0 319 363 204**
2ZR 001 412-161	**0 307 400 001**
2ZR 001 412-161	**0 307 400 050**
2ZR 003 734-041	**0 314 107 002**
5DV007760-55	**0 986 310 200**
5DV 007 810-01	**0 986 310 202**
6NM 007 282-211	**0 307 851 347**
9AB 028 309-001	**1 305 504 133**
9AB 087 437-001	**1 305 515 900**
9AB 115 705-005	**1 305 503 042**
9AB 141 181-005	**1 305 540 217**
9AB 141 182-005	**1 305 540 216**
9AG 090 661-001	**1 305 503 915**
9AG 104 328-001	**1 305 543 911**
9AG 122 796-005	**1 305 543 931**
9AG 122 798-005	**1 305 543 929**
9AG 126 547-005	**1 305 501 046**
9AH 127 703-051	**1 305 620 977**
9AH 127 703-051	**1 305 620 982**
9AH 127 703-061	**1 305 620 980**
9AH 127 704-051	**1 305 620 983**
9AH 127 704-061	**1 305 620 979**
9AH 130 137-015	**1 305 621 908**
9AH 130 137-021	**1 305 621 904**
9AH 130 137-021	**1 305 621 908**
9AH 130 138-015	**1 305 621 909**
9AH 130 138-021	**1 305 621 905**
9AH 130 138-021	**1 305 621 909**
9AH 144 231-031	**1 987 305 005**
9AH 144 231-041	**1 987 305 007**
9AH 144 232-031	**1 987 305 006**
9AH 144 232-041	**1 987 305 008**
9AH 150 865-011	**1 305 623 016**
9BG 134 887-011	**1 305 210 900**
9BG 136 027-011	**1 305 211 900**
9BG 136 028-011	**1 305 211 901**
9DE 087 430-011	**1 305 320 902**
9DE 094 595-001	**1 305 320 910**
9DE 112 654-001	**1 305 320 842**
9DE 114 470-001	**1 305 320 929**
9DE 116 065-001	**1 305 365 900**
9DE 116 730-001	**2 305 320 918**
9DE 116 732-001	**2 305 320 920**
9DE 118 792-001	**1 305 320 406**
9DE 118 793-001	**1 305 320 407**
9DE 119 305-005	**1 305 320 866**
9DE 119 305-005	**1 305 320 973**
9DE 119 382-005	**1 305 320 860**
9DE 121 317-011	**1 305 365 909**
9DE 121 317-021	**1 305 365 909**
9DE 122 228-011	**1 305 365 911**
9DE 122 228-021	**1 305 365 911**
9DE 122 850-005	**1 305 365 913**
9DE 127 408-051	**1 305 320 874**
9DE 127 409-051	**1 305 320 873**
9DE 129 974-021	**1 305 363 959**
9DE 129 975-021	**1 305 363 958**
9DF 112 247-001	**1 305 320 818**
9DR 060 567-001	**1 305 311 050**
9DR 080 691-011	**1 305 314 127**
9DR 080 700-011	**1 305 314 126**
9DR 091 085-001	**1 305 311 040**
9DR 091 085-001	**1 305 311 050**
9DR 101 111-001	**1 305 314 910**
9DR 104 336-001	**1 305 311 062**
9DR 112 345-001	**2 305 313 909**
9DR 112 345-005	**2 305 313 909**
9DR 112 547-001	**1 305 314 923**
9DR 112 606-001	**1 305 313 907**
9DR 112 607-001	**2 305 312 901**
9DR 115 965-001	**2 305 312 903**
9DR 117 811-001	**1 305 314 932**
9DR 118 536-001	**1 305 314 931**
9DR 123 237-001	**1 305 314 935**
9DR 123 238-001	**1 305 314 936**
9EL 092 435-011	**1 315 620 909**
9EL 120 651-001	**1 305 233 916**
9EL 120 652-001	**1 305 233 917**
9EL 127 353-011	**1 305 232 024**
9EL 127 354-011	**1 305 232 025**
9EL 127 688-001	**1 305 232 912**
9EL 129 161-011	**1 305 230 904**
9EL 129 162-011	**1 305 230 905**
9EL 129 614-011	**1 305 233 107**
9EL 129 614-011	**1 305 233 929**
9EL 129 615-011	**1 305 233 106**
9EL 129 615-011	**1 305 233 928**
9EL 135 007-001	**1 305 230 906**
9EL 135 008-001	**1 305 230 907**
9EL 140 347-021	**0 319 310 253**
9EL 140 348-021	**0 319 310 254**
9EL 141 115-021	**0 319 310 243**
9EL 141 116-021	**0 319 310 244**
9EL 141 605-011	**1 305 230 916**
9EL 141 606-011	**1 305 230 917**
9EL 144 131-001	**0 319 377 243**
9EL 144 132-001	**0 319 377 244**
9EL 145 833-021	**1 987 305 011**
9EL 145 834-021	**1 987 305 012**
9EL 145 933-001	**0 318 338 013**
9EL 145 934-001	**0 318 338 014**
9EL 145 935-001	**0 318 338 003**
9EL 145 936-001	**0 318 338 004**
9EL 150 867-001	**1 305 232 923**
9EL 150 868-001	**1 305 232 924**
9EL 150 987-001	**1 305 232 921**
9EL 150 988-001	**1 305 232 922**
9EL 151 875-021	**0 318 348 103**
9EL 151 876-021	**0 318 348 104**
9EL 157 577-011	**0 986 702 131**
9EL 157 577-021	**0 986 702 132**
9EL 157 577-031	**0 986 704 131**
9EL 157 577-041	**0 986 704 132**
9EL 157 577-051	**0 986 703 131**
9EL 157 577-061	**0 986 703 132**
9EL 157 577-071	**0 986 701 121**
9EL 157 577-081	**0 986 701 122**
9EL 157 577-091	**0 986 702 271**
9EL 157 577-101	**0 986 702 062**
9EL 157 577-111	**0 986 702 061**
9EL 157 577-121	**0 986 702 272**
9EL 157 577-131	**0 986 704 033**
9EL 157 577-141	**0 986 704 034**
9EL 157 578-011	**0 986 707 031**
9EL 157 578-021	**0 986 707 032**
9EL 963 111-011	**1 987 305 019**
9EL 963 111-014	**1 987 305 019**
9EL 963 112-011	**1 987 305 020**
9EL 963 112-014	**1 987 305 020**
9ES 015 675-001	**1 305 601 082**
9ES 051 681-001	**1 305 620 060**
9ES 071 899-021	**1 305 601 120**
9ES 071 899-021	**1 305 603 119**
9ES 080 658-001	**1 305 604 070**
9ES 082 415-001	**1 305 615 002**
9ES 085 427-011	**1 305 601 022**
9ES 090 667-001	**1 305 604 089**
9ES 091 183-001	**1 305 604 087**
9ES 094 561-001	**1 305 620 046**
9ES 101 055-001	**1 305 630 050**
9ES 108 058-001	**1 305 604 050**
9ES 108 058-001	**1 305 604 100**
9ES 108 058-0011	**1 305 604 060**
9ES 110 294-001	**1 305 630 022**
9ES 111 704-001	**2 305 620 900**
9ES 111 705-001	**1 305 620 900**
9ES 111 705-001	**2 305 620 901**
9ES 112 279-001	**2 305 603 900**
9ES 112 281-001	**1 305 604 005**
9ES 112 281-001	**1 305 604 007**
9ES 112 293-001	**1 305 615 004**
9ES 112 542-001	**1 305 630 018**
9ES 112 542-001	**1 305 630 068**
9ES 113 916-001	**2 305 620 904**
9ES 113 917-001	**2 305 620 904**
9ES 113 917-001	**2 305 620 905**
9ES 114 503-005	**1 305 603 020**
9ES 116 061-001	**1 305 620 321**
9ES 116 061-005	**1 305 620 321**
9ES 116 062-005	**1 305 620 322**
9ES 117 096-001	**1 305 620 205**
9ES 117 097-001	**1 305 620 204**
9ES 118 021-001	**1 305 620 206**
9ES 118 022-001	**1 305 620 207**
9ES 118 823-001	**1 305 620 367**
9ES 118 824-001	**1 305 620 368**
9ES 120 719-001	**1 305 620 272**
9ES 120 719-005	**1 305 620 272**
9ES 120 720-001	**1 305 620 273**
9ES 120 720-005	**1 305 620 273**
9ES 120 721-001	**1 305 620 268**
9ES 120 722-001	**1 305 620 269**
9ES 120 723-001	**1 305 620 270**

9ES 120 724-001	**1 305 620 271**
9ES 120 743-005	**1 305 620 468**
9ES 121 959-005	**1 305 620 467**
9ES 127 153-001	**1 305 620 200**
9ES 127 154-001	**1 305 620 201**
9ES 127 872-001	**1 305 620 203**
9ES 127 873-001	**1 305 620 202**
9ES 129 965-001	**1 305 620 487**
9ES 129 966-001	**1 305 620 488**
9ES 129 967-001	**1 305 620 489**
9ES 131 709-001	**1 305 621 052**
9ES 131 710-001	**1 305 621 053**
9ES 136 581-001	**1 305 621 143**
9ES 136 582-001	**1 305 621 144**
9ES 143 409-001	**1 305 621 822**
9ES 143 409-001	**1 305 621 959**
9ES 143 410-001	**1 305 621 823**
9ES 143 410-001	**1 305 621 960**
9ES 145 599-001	**1 987 305 013**
9ES 145 600-001	**1 987 305 014**
9ES 148 749-001	**1 987 305 015**
9ES 148 750-001	**1 987 305 016**
9ES 960 694-001	**1 305 621 055**
9EV 113 436-005	**2 305 610 301**
9GD 113 431-005	**2 301 014 107**
9GD 121 897-001	**2 301 014 126**
9GH 144 273-011	**1 987 305 009**
9HB 006 948-031	**1 987 305 017**
9HB 006 948-034	**1 987 305 017**
9HB 006 948-041	**1 987 305 018**
9HB 006 948-044	**1 987 305 018**
9HG 117 809-005	**1 305 542 073**
9HG 117 827-005	**1 305 542 074**
9HG 127 106-005	**1 305 542 082**

ISUZU

1-15629-138-0	**9 443 610 996**
1-15629-139-0	**9 443 610 997**
1-15629-142-0	**9 443 610 998**
1-15629-145-0	**9 443 611 687**
1-15629-147-0	**9 443 610 867**
1-15629-153-0	**9 443 610 868**
1-15779-183-0	**9 443 611 070**
1-15779-766-0	**F 019 Z3E 270**
8-97084-347-0	**9 442 610 042**
8-97084-374-0	**9 442 610 042**
8-97357-685-0	**9 442 610 042**
9-09571-308-0	**9 442 610 042**

IVECO

1118641	**2 916 710 602**
1287876	**1 305 305 050**
1287909	**1 305 605 100**
2916710509	**2 916 710 509**
3431297	**0 300 682 001**
41200587	**1 928 300 283**
41200588	**1 928 300 198**
42025104	**0 301 008 511**
42096482	**0 301 603 600**
42097175	**1 390 591 016**
42300389	**0 301 810 102**
42411290	**0 301 603 100**
42483568	**1 305 303 103**
42487100	**1 305 365 905**
42487166	**1 305 365 913**
42487167	**1 305 620 468**
42487169	**1 305 620 467**
42488020	**1 305 320 866**
42488022	**1 305 543 931**
42490230	**1 301 014 203**
42530258	**1 460 283 311**
42532180	**0 307 851 322**
42533147	**1 460 109 304**
42536208	**0 307 853 303**
42537951	**1 461 015 301**
42551388	**2 460 283 001**
4792107	**0 301 017 328**
4792109	**0 301 017 327**
4794369	**0 301 017 722**
4794369	**0 301 017 726**
4794370	**0 301 017 721**
4794370	**0 301 017 725**
4813434	**0 301 017 602**
4844478	**0 301 017 722**
4844479	**0 301 017 721**
4855967	**0 318 226 204**
4855968	**0 318 226 203**
4861342	**0 318 055 814**
4861343	**0 318 055 813**
500307756	**0 301 160 604**
500307757	**0 301 160 603**
500320684	**0 305 058 002**
500320685	**0 305 058 001**
500340695	**0 318 226 204**
500340695	**0 318 226 206**
500340696	**0 318 226 205**
500382761	**1 928 300 599**
500382764	**1 928 300 600**
5010347373	**0 305 402 117**
504104465	**0 318 249 203**
504104467	**0 318 249 204**
504181095	**0 318 442 009**
504181096	**0 318 504 009**
504238378	**0 318 148 513**
504238380	**0 318 148 514**
504238408	**0 318 148 713**
504238414	**0 318 148 714**
722441	**2 916 710 613**
79024925	**1 411 015 053**
79038472	**2 916 710 610**
79045965	**2 916 730 059**
79045967	**2 916 710 509**
7984047	**1 121 015 011**
8123363	**1 305 620 596**
8123364	**1 305 544 035**
8123367	**1 301 014 058**
8123373	**1 305 363 945**
8123374	**1 305 544 036**
8123389	**1 305 620 598**
8123390	**1 305 363 947**
8123463	**2 430 206 004**
8171320	**1 928 300 182**
8171321	**1 928 300 182**
8171322	**1 928 300 198**
8190126	**1 305 544 901**
8194388	**2 410 283 010**
92920017	**0 305 001 004**
92920018	**0 305 001 011**
9315677	**1 420 283 006**
93160245	**1 121 015 015**
93163738	**0 306 604 001**
93191165	**1 411 015 097**
93191492	**1 305 620 987**
93191507	**1 305 620 989**
93194302	**1 460 210 300**
98433912	**0 318 228 204**
98433913	**0 318 228 203**
98436761	**0 307 851 322**
98437476	**0 318 423 003**
98438671	**0 318 424 004**
98438672	**0 318 424 003**
98449181	**0 318 227 204**
98449182	**0 318 227 203**
98460036	**0 318 227 214**
98460038	**0 318 227 213**
98460047	**0 318 055 614**
98460048	**0 318 055 613**
98466402	**0 301 017 618**
98466403	**0 301 017 617**
98466406	**0 301 017 518**
98466407	**0 301 017 517**
98490934	**0 307 851 306**
9930050	**2 440 109 005**
9966633	**2 410 283 010**
9967278	**1 420 283 001**
9982656	**2 916 710 517**

KÄSSBOHRER

7 231 279 001	**1 928 300 246**
7 231 279 004 0	**1 928 300 198**
7 512 008 004	**1 305 604 089**
7 512 011 004	**1 305 620 060**
7 512 017 003	**1 305 311 062**
7 512 017 004	**1 305 543 911**
7 512 018 000	**0 301 710 100**
7 512 019 000 0	**0 301 204 101**
7 512 019 003	**1 305 320 893**
7 512 019 005	**1 305 540 097**
7 512 020 003	**1 305 303 961**
7 512 021 003	**1 305 353 917**
7 512 021 005	**1 305 540 944**
7 512 026 004	**1 305 621 001**
7 512 027 004	**1 305 621 002**
7 512 122 004	**1 305 620 367**
7 512 122 005	**1 305 543 905**
7 512 122 007	**1 301 015 097**
7 512 123 004	**1 305 620 368**
7 512 127 003	**1 305 321 800**
7 512 127 004	**1 305 621 979**
7 512 127 103	**1 305 363 980**
7 512 128 004	**1 305 621 980**
7 512 309 000	**0 306 404 001**
7 513 010 000	**0 305 001 004**
7 513 010 006	**1 305 320 816**
7 513 011 000	**0 305 403 001**
7 513 018 000	**0 305 603 028**
7 515 001 004	**1 305 620 002**
7 517 112 007	**1 301 015 115**
7 517 114 006	**1 305 354 911**
7 517 114 015	**1 305 540 117**
7 521 001 007	**1 300 212 012**
7 521 003 004	**1 315 620 323**
7 526 005 004	**1 315 601 900**
8 231 122 000	**2 916 710 622**
8 311 999 074	**2 440 109 005**

MAN

06 56180 0707	**2 916 710 602**
06 56180 0716	**2 916 710 606**
06 56180 0813	**2 916 710 502**
06 56190 0704	**2 916 710 608**
06 56190 0706	**2 916 710 610**
06 56190 0712	**2 916 710 613**
06 56190 0722	**2 916 710 618**
11 20087 2028	**2 916 710 616**
11 20087 2040	**1 410 281 040**
11 22587 2003	**2 440 109 005**
51 25435 0112	**1 928 300 439**
51 26903 0010	**6 033 AC5 189**
51 96501 0351	**1 230 251 010**
81 11904 0002	**1 410 206 020**
81 11904 0046	**1 411 015 057**
81 11904 0050	**1 411 015 056**
81 12903 0001	**2 440 109 005**
81 25101 6027	**0 302 354 001**

◀ MAN

81 25101 6028	**0 302 354 002**
81 25101 6030	**0 301 303 550**
81 25101 6031	**0 301 303 010**
81 25101 6041	**0 301 303 015**
81 25101 6075	**0 301 303 016**
81 25101 6076	**0 301 303 018**
81 25101 6079	**0 301 608 050**
81 25101 6080	**0 301 603 100**
81 25101 6081	**0 305 601 004**
81 25101 6098	**0 301 008 511**
81 25101 6116	**0 302 353 006**
81 25101 6117	**0 302 353 005**
81 25101 6118	**0 301 608 611**
81 25101 6127	**0 301 810 102**
81 25101 6171	**0 301 603 600**
81 25101 6173	**0 306 901 003**
81 25101 6175	**0 302 300 003**
81 25101 6176	**0 302 300 004**
81 25101 6179	**0 302 300 005**
81 25101 6180	**0 302 300 006**
81 25101 6188	**0 306 001 004**
81 25101 6203	**0 301 017 703**
81 25101 6211	**0 301 017 504**
81 25101 6224	**0 301 017 704**
81 25101 6232	**0 301 017 605**
81 25101 6233	**0 301 017 605**
81 25101 6266	**0 306 001 201**
81 25101 6276	**0 301 017 622**
81 25101 6277	**0 301 017 621**
81 25101 7023	**0 300 682 001**
81 25102 6013	**0 313 100 005**
81 25102 6018	**0 313 101 004**
81 25102 6020	**0 305 402 001**
81 25102 6023	**0 313 103 012**
81 25102 6028	**0 305 451 005**
81 25102 6030	**0 305 451 005**
81 25102 6043	**0 305 001 004**
81 25102 6044	**0 313 103 006**
81 25102 6051	**0 313 107 002**
81 25102 6062	**0 305 001 005**
81 25102 6082	**0 305 406 001**
81 25103 6005	**0 307 100 006**
81 25103 6010	**0 307 400 004**
81 25103 6010	**0 314 106 001**
81 25103 6013	**0 307 301 003**
81 25103 6031	**0 314 106 001**
81 25110 0009	**1 305 303 041**
81 25110 0031	**1 305 620 046**
81 25110 0036	**1 305 620 016**
81 25110 0040	**1 305 604 060**
81 25110 0045	**1 305 543 923**
81 25110 0053	**1 305 620 058**
81 25110 0054	**1 305 620 129**
81 25110 0055	**1 305 620 057**
81 25110 0058	**1 305 604 026**
81 25110 0059	**1 305 620 468**
81 25110 0060	**1 305 620 467**
81 25110 0063	**1 305 620 469**
81 25110 6001	**1 305 543 906**
81 25110 6002	**1 305 620 900**
81 25110 6003	**1 305 620 214**
81 25111 0006	**1 300 212 012**
81 25111 0007	**1 300 212 010**
81 25111 0018	**1 301 015 004**
81 25111 0020	**1 301 015 067**
81 25111 0025	**1 300 212 013**
81 25111 0035	**1 301 015 081**
81 25111 0043	**1 301 014 203**
81 25113 0014	**1 305 320 911**
81 25113 0015	**1 305 320 910**
81 25113 0018	**1 305 320 973**
81 25113 0025	**1 305 320 860**
81 25113 0026	**1 305 320 866**
81 25113 0029	**1 305 333 026**
81 25113 0032	**1 305 320 816**
81 25113 0033	**1 305 365 913**
81 25113 0037	**1 305 333 907**
81 25113 0038	**1 305 320 817**
81 25113 0041	**1 305 303 961**
81 25113 6005	**1 305 303 908**
81 25113 6006	**1 305 303 103**
81 25113 6013	**1 305 320 865**
81 25114 0014	**1 305 504 927**
81 25114 0015	**1 305 504 115**
81 25114 0018	**1 305 503 061**
81 25114 0019	**1 305 503 061**
81 25114 0031	**1 305 543 931**
81 25114 0032	**1 305 543 930**
81 25114 0033	**1 305 501 133**
81 25114 0041	**1 305 540 932**
81 25114 0043	**1 305 501 134**
81 25114 0044	**1 305 504 036**
81 25115 0004	**1 305 543 929**
81 25115 0012	**1 305 544 901**
81 25140 6011	**0 302 601 001**
81 25140 6018	**0 302 703 007**
81 25140 6019	**0 302 703 008**
81 25150 6012	**0 307 851 306**
81 25150 6017	**0 307 851 356**
81 25225 6033	**0 311 115 010**
81 25229 0014	**1 315 620 909**
81 25233 0007	**8 785 300 039**
81 25233 0009	**8 785 300 072**
81 25320 6020	**0 311 353 002**
81 25435 0635	**1 928 300 246**
81 25435 0636	**1 928 300 198**
81 25435 0933	**1 928 300 219**
81 25475 0070	**1 928 300 283**
81 25516 0027	**3 341 015 005**
81 26119 0004	**1 121 015 015**
81 96501 0477	**1 420 283 001**
81 96501 0501	**1 410 281 012**
81 96501 0687	**1 450 109 101**
81 96502 0282	**1 460 283 311**
81 96502 0317	**1 460 210 300**
81 96502 0819	**1 121 015 011**
81 96503 0101	**2 410 283 010**
81 96503 0175	**1 420 283 006**
81 96503 0313	**2 460 283 001**
81 96601 0327	**1 928 300 198**
81 96601 0328	**1 928 300 182**
81 96601 0534	**1 461 015 301**
81 96601 0534	**1 461 015 302**
81 98701 0009	**2 916 710 601**
84 25110 0013	**1 305 620 909**
88 25102 6001	**0 305 451 007**
90 60197 0200	**0 305 554 006**
90 81615 9218	**0 313 103 002**
90 81692 6215	**2 916 710 608**
90 81694 4257	**1 410 281 012**
90 81695 4140	**2 916 720 316**
90 81695 6140	**2 916 720 316**

MARELLI

LAA 000	**0 318 590 019**
LAA 030	**0 318 490 029**
LAA 031	**0 318 429 004**
LAA 032	**0 318 429 003**
LAA 040	**1 987 306 401**
LAA 050	**1 987 306 400**
LAA 051	**0 318 413 004**
LAA 052	**0 318 413 003**
LAA 061	**0 318 501 004**
LAA 062	**0 318 501 003**
LAA 070	**0 318 303 509**
LAA 080	**0 318 303 519**
LAA 101	**0 318 426 014**
LAA 102	**0 318 426 013**
LAA 111	**0 318 501 014**
LAA 112	**0 318 501 013**
LAA 121	**0 318 418 004**
LAA 122	**0 318 418 003**
LAA 140	**0 318 503 009**
LAA 150	**0 318 436 009**
LAA 151	**0 318 433 004**
LAA 152	**0 318 433 003**
LAA 161	**0 318 433 104**
LAA 162	**0 318 433 103**
LAA 170	**0 305 406 001**
LAA 171	**0 318 502 004**
LAA 172	**0 318 502 003**
LAA 180	**0 306 407 001**
LAA 211	**0 318 437 004**
LAA 212	**0 318 437 003**
LAA 220	**0 318 490 069**
LAA 221	**0 318 406 004**
LAA 222	**0 318 406 003**
LAA 240	**0 318 590 009**
LAA 241	**0 318 425 004**
LAA 242	**0 318 425 003**
LAA 261	**0 318 403 004**
LAA 262	**0 318 403 003**
LAA 281	**0 318 420 004**
LAA 282	**0 318 420 003**
LAA 301	**0 318 405 004**
LAA 302	**0 318 405 003**
LAA 331	**0 318 417 004**
LAA 332	**0 318 417 003**
LAA 340	**0 318 490 009**
LAA 351	**0 318 421 004**
LAA 352	**0 318 421 003**
LAA 381	**0 318 413 014**
LAA 382	**0 318 413 013**
LAA 391	**0 318 438 004**
LAA 392	**0 318 438 003**
LAA 412	**0 318 423 003**
LAA 431	**0 318 402 004**
LAA 432	**0 318 402 003**
LAA 451	**0 318 410 004**
LAA 452	**0 318 410 003**
LAA 461	**0 318 403 014**
LAA 462	**0 318 403 013**
LAA 471	**0 318 430 004**
LAA 472	**0 318 430 003**
LAA 491	**0 318 411 004**
LAA 492	**0 318 411 003**
LAA 501	**0 318 427 004**
LAA 502	**0 318 427 003**
LAA 551	**0 318 401 004**
LAA 552	**0 318 401 003**
LAA 561	**0 318 415 004**
LAA 562	**0 318 415 003**
LAA 571	**0 318 437 006**
LAA 572	**0 318 437 005**
LAA 591	**0 318 417 014**
LAA 592	**0 318 417 013**
LAA 601	**0 318 407 004**
LAA 602	**0 318 407 003**
LAA 611	**0 318 419 004**
LAA 612	**0 318 419 003**
LAA 621	**0 318 408 004**
LAA 622	**0 318 408 003**
LAA 631	**0 318 434 004**
LAA 632	**0 318 434 003**
LAA 640	**0 318 490 059**
LAA 641	**0 318 435 004**
LAA 642	**0 318 435 003**

M

LAA 651	**0 318 412 004**
LAA 652	**0 318 412 003**
LAA 661	**0 318 431 004**
LAA 662	**0 318 431 003**
LAA 670	**0 318 490 039**
LAA 671	**0 318 428 004**
LAA 672	**0 318 428 003**
LAA 791	**0 318 410 014**
LAA 792	**0 318 410 013**
LAA 801	**0 318 435 006**
LAA 802	**0 318 435 005**
LAA 811	**0 318 404 004**
LAA 812	**0 318 404 003**
LAA 821	**0 318 424 004**
LAA 822	**0 318 424 003**
LAB 061	**0 318 409 004**
LAB 062	**0 318 409 003**
LAB 070	**0 318 490 089**
LAB 081	**0 318 422 014**
LAB 082	**0 318 422 013**
LAB 091	**0 318 422 004**
LAB 130	**0 301 302 101**
LAB 140	**0 301 302 102**
LAB 170	**0 301 304 100**
LAB 171	**0 318 408 014**
LAB 172	**0 318 408 013**
LAB 181	**0 318 414 004**
LAB 182	**0 318 414 003**
LAB 210	**0 301 603 100**
LAB 220	**0 301 680 101**
LAB 250	**0 301 710 100**
LAB 260	**0 301 810 102**
LAB 262	**0 301 709 009**
LAB 270	**0 303 051 111**
LAB 271	**0 305 050 002**
LAB 272	**0 305 050 001**
LAB 281	**0 305 051 002**
LAB 282	**0 305 051 001**
LAB 291	**0 305 053 002**
LAB 291	**0 305 053 004**
LAB 292	**0 305 053 001**
LAB 292	**0 305 053 003**
LAB 300	**0 305 001 004**
LAB 301	**0 305 054 002**
LAB 302	**0 305 054 001**
LAB 311	**0 305 056 002**
LAB 312	**0 305 056 001**
LAB 321	**0 305 120 002**
LAB 322	**0 305 120 001**
LAB 330	**0 305 402 001**
LAB 331	**0 305 120 102**
LAB 332	**0 305 120 101**
LAB 340	**0 305 406 014**
LAB 341	**0 305 120 106**
LAB 350	**0 305 450 037**
LAB 371	**0 305 303 002**
LAB 372	**0 305 303 001**
LAB 381	**0 305 401 002**
LAB 382	**0 305 401 001**
LAB 411	**0 305 450 052**
LAB 421	**0 305 601 012**
LAB 422	**0 305 601 011**
LAB 441	**0 306 604 012**
LAB 442	**0 306 604 011**
LAB 451	**0 305 058 002**
LAB 452	**0 305 058 001**
LAB471	**0 318 432 006**
LAB472	**0 318 432 005**
LAB 480	**0 318 490 129**
LAB 481	**0 305 063 002**
LAB 482	**0 305 063 001**
LAB 490	**0 318 490 119**
LAB 491	**0 305 054 012**
LAB 492	**0 305 054 011**
LAB 501	**0 305 059 002**
LAB 502	**0 305 059 001**
LAB 531	**0 305 066 002**
LAB 532	**0 305 066 001**
LAB 550	**0 318 439 009**
LAB 551	**0 305 063 004**
LAB 552	**0 305 063 003**
LAB 561	**0 305 060 004**
LAB 562	**0 305 060 003**
LAB 581	**0 305 060 002**
LAB 582	**0 305 060 001**
LAB 601	**0 305 068 004**
LAB 602	**0 305 068 003**
LAB 611	**0 305 062 004**
LAB 612	**0 305 062 003**
LAB 641	**0 318 432 008**
LAB 642	**0 318 432 007**
LAB 651	**0 318 434 006**
LAB 652	**0 318 434 005**
LAB 661	**0 305 069 002**
LAB 662	**0 305 069 001**
LAB 671	**0 318 440 004**
LAB 672	**0 318 440 003**
LAB 681	**0 305 065 002**
LAB 682	**0 305 065 001**
LAB 691	**0 305 075 002**
LAB 692	**0 305 075 001**
LAB 711	**0 305 077 002**
LAB 712	**0 305 077 001**
LAB 721	**0 305 076 002**
LAB 722	**0 305 076 001**
LAB731	**0 305 079 002**
LAB732	**0 305 079 001**
LAB 741	**1 307 022 646**
LAB 742	**1 307 022 645**
LAB751	**0 318 441 004**
LAB752	**0 318 441 003**
LAB 761	**0 305 074 002**
LAB 762	**0 305 074 001**
LAB 771	**0 305 080 002**
LAB 772	**0 305 080 001**
LLA 070	**0 318 303 509**
LLA 080	**0 318 303 519**
LLA 161	**0 318 335 004**
LLA 162	**0 318 335 003**
LLA 191	**0 318 221 004**
LLA 192	**0 318 221 003**
LLA 201	**0 318 221 204**
LLA 202	**0 318 221 203**
LLA 222	**0 318 336 103**
LLA 242	**0 318 311 013**
LLA 301	**0 318 302 204**
LLA 302	**0 318 302 203**
LLA 351	**0 318 325 204**
LLA 352	**0 318 325 203**
LLA 371	**0 318 311 004**
LLA 372	**0 318 311 003**
LLA 401	**0 318 234 214**
LLA 402	**0 318 234 213**
LLA 421	**0 318 219 204**
LLA 422	**0 318 219 203**
LLA 471	**1 987 306 212**
LLA 472	**1 987 306 211**
LLA 481	**1 987 306 214**
LLA 482	**1 987 306 213**
LLA 581	**0 318 338 004**
LLA 582	**0 318 338 003**
LLA 591	**0 318 338 014**
LLA 592	**0 318 338 013**
LLA 601	**1 987 306 208**
LLA 602	**1 987 306 207**
LLA 611	**1 987 306 206**
LLA 612	**1 987 306 205**
LLA 631	**0 318 204 004**
LLA 632	**0 318 204 003**
LLA 641	**0 318 204 204**
LLA 642	**0 318 204 203**
LLA 651	**0 318 219 004**
LLA 652	**0 318 219 003**
LLA 681	**0 318 202 004**
LLA 682	**0 318 202 003**
LLA 691	**0 318 202 204**
LLA 692	**0 318 202 203**
LLA 701	**0 311 329 002**
LLA 702	**0 311 329 001**
LLA 731	**0 318 203 004**
LLA 732	**0 318 203 003**
LLA 741	**0 318 203 204**
LLA 742	**0 318 203 203**
LLA 751	**0 318 212 204**
LLA 752	**0 318 212 203**
LLA 771	**0 318 205 204**
LLA 772	**0 318 205 203**
LLA 841	**0 318 230 204**
LLA 842	**0 318 230 203**
LLA 851	**0 318 230 214**
LLA 852	**0 318 230 213**
LLA 861	**0 318 218 204**
LLA 862	**0 318 218 203**
LLA 871	**0 318 228 204**
LLA 872	**0 318 228 203**
LLA 881	**0 318 222 004**
LLA 882	**0 318 222 003**
LLA 891	**0 318 222 204**
LLA 892	**0 318 222 203**
LLA 901	**0 318 303 204**
LLA 902	**0 318 303 203**
LLA 911	**0 318 303 004**
LLA 912	**0 318 303 003**
LLA 931	**0 318 303 014**
LLA 941	**0 318 226 204**
LLA 942	**0 318 226 203**
LLA 951	**0 318 324 204**
LLA 952	**0 318 324 203**
LLA 961	**0 318 326 204**
LLA 962	**0 318 326 203**
LLB 001	**0 318 208 204**
LLB 002	**0 318 208 203**
LLB 021	**0 318 227 214**
LLB 022	**0 318 227 213**
LLB 031	**0 318 227 204**
LLB 032	**0 318 227 203**
LLB 041	**1 987 306 216**
LLB 042	**1 987 306 215**
LLB 051	**0 318 211 004**
LLB 052	**0 318 211 003**
LLB 061	**0 318 206 204**
LLB 062	**0 318 206 203**
LLB 071	**0 318 209 204**
LLB 072	**0 318 209 203**
LLB 081	**0 318 234 204**
LLB 082	**0 318 234 203**
LLB 091	**0 318 203 014**
LLB 092	**0 318 203 013**
LLB 101	**0 318 203 214**
LLB 102	**0 318 203 213**
LLB 111	**0 318 210 204**
LLB 112	**0 318 210 203**
LLB 131	**0 318 304 004**
LLB 132	**0 318 304 003**
LLB 141	**0 318 304 104**
LLB 142	**0 318 304 103**
LLB 161	**0 318 214 004**
LLB 162	**0 318 214 003**
LLB 171	**0 318 214 204**
LLB 172	**0 318 214 203**

◀ MARELLI

LLB 181	**0 318 215 404**
LLB 182	**0 318 215 403**
LLB 191	**0 318 319 204**
LLB 192	**0 318 319 203**
LLB 201	**0 318 332 204**
LLB 202	**0 318 332 203**
LLB 211	**0 318 332 214**
LLB 212	**0 318 332 213**
LLB 221	**0 318 332 304**
LLB 222	**0 318 332 303**
LLB 241	**0 318 342 004**
LLB 242	**0 318 342 003**
LLB 251	**1 987 306 326**
LLB 252	**1 987 306 325**
LLB 261	**0 318 235 204**
LLB 262	**0 318 235 203**
LLB 271	**0 318 305 004**
LLB 272	**0 318 305 003**
LLB 281	**0 318 313 204**
LLB 282	**0 318 313 203**
LLB 291	**1 987 306 004**
LLB 292	**1 987 306 003**
LLB 301	**0 318 339 204**
LLB 302	**0 318 339 203**
LLB 311	**0 318 339 214**
LLB 312	**0 318 339 213**
LLB 341	**0 318 211 204**
LLB 342	**0 318 211 203**
LLB 351	**0 318 314 004**
LLB 352	**0 318 314 003**
LLB 361	**0 318 314 204**
LLB 362	**0 318 314 203**
LLB 391	**1 987 306 210**
LLB 392	**1 987 306 209**
LLB 401	**0 318 241 204**
LLB 402	**0 318 241 203**
LLC 101	**0 318 341 304**
LLC 102	**0 318 341 303**
LLC 111	**0 318 341 204**
LLC 112	**0 318 341 203**
LLC 161	**0 318 344 014**
LLC 162	**0 318 344 013**
LLC 191	**0 318 243 204**
LLC 192	**0 318 243 203**
LLC 211	**0 318 242 204**
LLC 212	**0 318 242 203**
LLC 231	**0 318 229 004**
LLC 232	**0 318 229 003**
LLC 261	**0 318 331 004**
LLC 262	**0 318 331 003**
LLC 281	**0 318 245 204**
LLC 282	**0 318 245 203**
LLC 312	**1 987 306 005**
LLC 321	**0 318 339 224**
LLC 322	**0 318 339 223**
LLC 331	**0 318 339 234**
LLC 332	**0 318 339 233**
LLC 361	**0 318 337 002**
LLC 362	**0 318 337 003**
LLC 371	**0 318 337 004**
LLC 381	**0 311 329 004**
LLC 382	**0 311 329 003**
LLC 400	**1 987 306 007**
LLC 410	**1 987 306 008**
LLC 411	**0 318 345 004**
LLC 412	**0 318 345 003**
LLC 431	**0 318 244 204**
LLC 432	**0 318 244 203**
LLC 441	**0 318 239 004**
LLC 442	**0 318 239 003**
LLC 451	**0 318 306 104**
LLC 452	**0 318 306 103**
LLC 461	**0 318 306 004**
LLC 462	**0 318 306 003**
LLC 470	**0 318 216 009**
LLC 471	**0 318 216 004**
LLC 472	**0 318 216 003**
LLC 491	**0 318 322 004**
LLC 492	**0 318 322 003**
LLC 501	**0 318 231 204**
LLC 502	**0 318 231 203**
LLC 511	**0 318 333 204**
LLC 512	**0 318 333 203**
LLC 521	**0 318 333 214**
LLC 522	**0 318 333 213**
LLC 531	**0 318 333 304**
LLC 532	**0 318 333 303**
LLC 541	**0 318 236 204**
LLC 560	**1 987 306 027**
LLC 561	**0 318 307 004**
LLC 562	**0 318 307 003**
LLC 570	**0 318 307 509**
LLC 571	**1 305 230 134**
LLC 572	**1 305 230 133**
LLC 581	**1 987 306 012**
LLC 582	**1 987 306 011**
LLC 601	**0 318 348 104**
LLC 602	**0 318 348 103**
LLC 611	**0 318 347 204**
LLC 612	**0 318 347 203**
LLC 621	**0 318 346 204**
LLC 622	**0 318 346 203**
LLC 631	**0 318 317 014**
LLC 632	**0 318 317 013**
LLC 651	**0 318 334 204**
LLC 652	**0 318 334 203**
LLC 661	**0 318 334 214**
LLC 662	**0 318 334 213**
LLC 671	**0 318 323 004**
LLC 672	**0 318 323 003**
LLC 681	**0 318 237 204**
LLC 682	**0 318 237 203**
LLC 711	**0 318 317 004**
LLC 712	**0 318 317 003**
LLC 721	**0 318 213 004**
LLC 722	**0 318 213 003**
LLC 731	**1 987 306 010**
LLC 732	**1 987 306 009**
LLC 741	**1 987 306 324**
LLC 742	**1 987 306 323**
LLC 751	**0 311 315 002**
LLC 752	**0 311 315 001**
LLC761	**0 318 226 206**
LLC762	**0 318 226 205**
LLC 770	**0 311 424 003**
LLC 780	**0 311 424 004**
LLC 801	**0 311 315 022**
LLC 802	**0 311 315 021**
LLC 810	**0 315 105 001**
LLC 811	**0 311 315 032**
LLC 812	**0 311 315 031**
LLC 821	**0 311 319 002**
LLC 822	**0 311 319 001**
LLC 831	**0 311 322 004**
LLC 832	**0 311 322 003**
LLC 841	**0 311 328 002**
LLC 842	**0 311 328 001**
LLC 851	**0 311 328 004**
LLC 852	**0 311 328 003**
LLC 862	**0 315 104 025**
LLC 871	**0 315 110 004**
LLC 872	**0 315 110 003**
LLC 881	**0 311 325 006**
LLC 882	**0 311 325 005**
LLC 891	**0 315 104 034**
LLC 892	**0 315 104 033**
LLC 911	**0 318 341 002**
LLC 912	**0 318 341 001**
LLC 931	**1 315 106 919**
LLC 932	**1 315 106 918**
LLC 941	**0 318 339 244**
LLC 942	**0 318 339 243**
LLC 951	**0 318 235 104**
LLC 952	**0 318 235 103**
LLC 971	**1 315 106 911**
LLC 972	**1 315 106 910**
LLC 981	**1 305 230 907**
LLC 982	**1 305 230 906**
LLC 991	**1 305 230 917**
LLC 992	**1 305 230 916**
LLD 011	**1 305 232 924**
LLD 012	**1 305 232 923**
LLD 031	**1 305 233 937**
LLD 032	**1 305 233 936**
LLD 041	**1 305 233 939**
LLD 042	**1 305 233 938**
LLD 061	**1 315 106 917**
LLD 062	**1 315 106 916**
LLD 091	**0 318 216 204**
LLD 092	**0 318 216 203**
LLD 101	**0 311 330 006**
LLD 102	**0 311 330 005**
LLD 221	**0 311 330 002**
LLD 222	**0 311 330 001**
LLD 231	**0 311 327 006**
LLD 232	**0 311 327 005**
LLD 241	**0 311 327 002**
LLD 242	**0 311 327 001**
LLD 321	**0 318 350 204**
LLD 322	**0 318 350 203**
LLD 371	**0 319 338 214**
LLD 372	**0 319 338 213**
LLD 391	**0 319 307 204**
LLD 392	**0 319 307 203**
LLD 401	**0 319 316 104**
LLD 402	**0 319 316 103**
LLD 411	**0 319 316 204**
LLD 412	**0 319 316 203**
LLD 421	**0 319 316 144**
LLD 422	**0 319 316 143**
LLD 431	**0 319 316 244**
LLD 432	**0 319 316 243**
LLD 441	**0 319 333 214**
LLD 442	**0 319 333 213**
LLD 451	**0 319 357 144**
LLD 452	**0 319 357 143**
LLD 461	**0 319 357 174**
LLD 462	**0 319 357 173**
LLD 472	**0 319 357 145**
LLD 491	**0 319 357 344**
LLD 492	**0 319 357 343**
LLD 501	**0 319 357 374**
LLD 502	**0 319 357 373**
LLD 511	**0 319 343 106**
LLD 512	**0 319 343 103**
LLD 521	**0 319 343 104**
LLD 542	**0 319 362 243**
LLD 551	**0 319 362 244**
LLD 552	**0 319 362 273**
LLD 561	**0 319 362 274**
LLD 562	**0 319 366 143**
LLD 571	**0 319 366 144**
LLD 572	**0 319 366 173**
LLD 581	**0 319 366 174**
LLD 582	**0 319 366 145**
LLD 591	**0 319 366 146**
LLD 621	**0 311 329 012**
LLD 622	**0 311 329 011**
LLD 631	**0 311 329 014**
LLD 632	**0 311 329 013**

M

LLD 641	**0 318 239 006**
LLD 642	**0 318 239 005**
LLD 671	**1 305 233 920**
LLD 672	**1 305 233 921**
LLD 681	**1 315 106 952**
LLD 682	**1 315 106 951**
LLD 901	**0 318 337 006**
LLD 902	**0 318 337 005**
LLD 921	**0 319 350 104**
LLD 922	**0 319 350 103**
LLD 931	**0 319 350 106**
LLD 932	**0 319 350 105**
LLD 951	**0 319 317 204**
LLD 952	**0 319 317 203**
LLD 961	**0 319 317 244**
LLD 962	**0 319 317 243**
LLD 971	**0 319 304 204**
LLD 972	**0 319 304 203**
LLD 981	**0 318 318 006**
LLD 982	**0 318 318 005**
LLE 001	**0 319 338 206**
LLE 002	**0 319 338 205**
LLE 011	**0 319 338 204**
LLE 012	**0 319 338 203**
LLE 031	**0 319 342 044**
LLE 032	**0 319 342 043**
LLE 041	**0 319 342 046**
LLE 071	**0 319 337 204**
LLE 072	**0 319 337 203**
LLE 131	**0 311 332 002**
LLE 132	**0 311 332 001**
LLE 171	**0 319 339 104**
LLE 172	**0 319 339 103**
LLE201	**0 319 368 212**
LLE 202	**0 319 368 201**
LLE211	**0 319 368 214**
LLE 212	**0 319 368 203**
LLE221	**0 319 368 216**
LLE 222	**0 319 368 205**
LLE 231	**0 319 368 202**
LLE232	**0 319 368 211**
LLE 241	**0 319 368 204**
LLE242	**0 319 368 213**
LLE 251	**0 319 368 206**
LLE252	**0 319 368 215**
LLE 311	**0 305 070 002**
LLE 312	**0 305 070 001**
LLE 321	**0 318 348 006**
LLE 321	**0 319 349 104**
LLE 322	**0 318 348 005**
LLE 322	**0 319 349 103**
LLE 331	**0 318 348 016**
LLE 331	**0 319 349 106**
LLE 332	**0 318 348 015**
LLE 332	**0 319 349 105**
LLE 341	**0 318 348 204**
LLE 341	**0 319 348 204**
LLE 342	**0 318 348 203**
LLE 342	**0 319 348 203**
LLE 351	**0 319 324 104**
LLE 352	**0 319 324 103**
LLE 361	**0 319 372 704**
LLE 362	**0 319 372 703**
LLE 381	**0 319 370 304**
LLE 382	**0 319 370 303**
LLE 391	**0 319 370 306**
LLE 392	**0 319 370 305**
LLE 401	**0 319 372 705**
LLE 402	**0 319 372 706**
LLE 411	**0 319 375 204**
LLE 412	**0 319 375 203**
LLE 421	**0 319 325 204**
LLE 422	**0 319 325 203**
LLE 431	**0 319 373 204**
LLE 432	**0 319 373 203**
LLE 441	**0 319 373 206**
LLE 442	**0 319 373 205**
LLE 491	**0 319 383 106**
LLE 492	**0 319 383 105**
LLE 501	**0 319 383 104**
LLE 502	**0 319 383 103**
LLE 522	**0 319 357 245**
LLE 531	**0 319 357 244**
LLE 532	**0 319 357 243**
LLE 541	**0 319 361 204**
LLE 542	**0 319 361 203**
LLE 561	**0 319 366 446**
LLE 562	**0 319 366 445**
LLE 571	**0 319 366 444**
LLE 572	**0 319 366 443**
LLE 581	**0 319 206 204**
LLE 582	**0 319 206 203**
LLE 591	**0 319 358 244**
LLE 592	**0 319 358 243**
LLE 651	**0 319 364 044**
LLE 652	**0 319 364 043**
LLE 661	**0 319 364 144**
LLE 662	**0 319 364 143**
LLE 671	**0 319 364 244**
LLE 672	**0 319 364 243**
LLE 681	**0 319 364 344**
LLE 682	**0 319 364 343**
LLE 691	**0 319 331 204**
LLE 692	**0 319 331 203**
LLE 701	**0 319 320 204**
LLE 702	**0 319 320 203**
LLE 711	**0 319 320 214**
LLE 712	**0 319 320 213**
LLE 721	**0 319 302 204**
LLE 722	**0 319 302 203**
LLE 731	**0 319 302 214**
LLE 732	**0 319 302 213**
LLE 741	**0 318 249 204**
LLE 742	**0 318 249 203**
LLE 751	**0 319 384 106**
LLE 752	**0 319 384 105**
LLE 761	**0 319 384 104**
LLE 762	**0 319 384 103**
LLE 791	**0 319 380 704**
LLE 792	**0 319 380 703**
LLE 801	**0 319 380 706**
LLE 802	**0 319 380 705**
LLE 811	**0 319 330 204**
LLE 812	**0 319 330 203**
LLE 821	**0 319 330 214**
LLE 822	**0 319 330 213**
LLE 831	**0 319 330 206**
LLE 832	**0 319 330 205**
LLE 841	**0 319 330 216**
LLE 842	**0 319 330 215**
LLE 851	**0 319 318 204**
LLE 852	**0 319 318 203**
LLE 861	**0 319 318 214**
LLE 862	**0 319 318 213**
LLE 871	**0 319 363 204**
LLE 872	**0 319 363 203**
LLE 881	**0 319 346 104**
LLE 882	**0 319 346 103**
LLE 891	**0 319 322 204**
LLE 892	**0 319 322 203**
LLE 921	**0 318 318 008**
LLE 922	**0 318 318 007**
LLE 931	**0 319 321 204**
LLE 932	**0 319 321 203**
LLE 951	**0 319 335 104**
LLE 952	**0 319 335 103**
LLE 961	**0 319 385 104**
LLE 962	**0 319 385 103**
LLE 991	**0 319 381 704**
LLE 992	**0 319 381 703**
LLF 001	**0 319 381 706**
LLF 002	**0 319 381 705**
LLF 011	**0 319 319 104**
LLF 012	**0 319 319 103**
LLF 021	**0 319 319 114**
LLF 022	**0 319 319 113**
LLF 041	**0 318 351 104**
LLF 042	**0 318 351 103**
LLF 051	**0 318 351 124**
LLF 052	**0 318 351 123**
LLF 061	**0 319 385 204**
LLF 062	**0 319 385 203**
LLF 101	**0 319 382 204**
LLF 102	**0 319 382 203**
LLF111	**0 318 307 104**
LLF112	**0 318 307 103**
LLF 131	**0 318 350 304**
LLF 132	**0 318 350 303**
LLF 151	**0 319 336 404**
LLF 152	**0 319 336 403**
LLF 321	**0 319 345 104**
LLF 322	**0 319 345 103**
LLF 331	**0 319 347 104**
LLF 332	**0 319 347 103**
LLF 761	**0 319 309 204**
LLF 762	**0 319 309 203**
LLF 771	**0 319 309 206**
LLF 772	**0 319 309 205**
LLF861	**0 319 392 206**
LLF862	**0 319 392 205**
LLF871	**0 319 392 204**
LLF872	**0 319 392 203**
LLG021	**0 319 398 704**
LLG022	**0 319 398 703**
LLG031	**0 319 399 704**
LLG032	**0 319 399 703**
LPA 570	**1 987 306 000**
LPA 730	**1 987 306 100**
LPB 252	**1 307 022 070**
LPB590	**1 987 306 114**
LPB 791	**1 987 306 037**
LPB 792	**1 987 306 036**
LPC 081	**1 987 306 014**
LPC 082	**1 987 306 013**
LPC 211	**1 305 621 237**
LPC 212	**1 305 621 238**
LPC 241	**1 987 306 018**
LPC 281	**1 305 621 577**
LPC 282	**1 305 621 576**
LPE 491	**0 301 033 206**
LPE 492	**0 301 033 205**
LPE 871	**1 307 022 026**
LPE 872	**1 307 022 025**
LPF 421	**1 307 022 195**
LPF 422	**1 307 022 194**
LPF 731	**0 306 403 002**
LPF 732	**0 306 403 001**
LPF 881	**1 307 022 006**
LPF 882	**1 307 022 005**
LPF 961	**1 307 022 102**
LPF 962	**1 307 022 101**
LPG 151	**1 307 022 134**
LPG 161	**1 307 022 130**
LPG162	**1 307 022 129**
LPG 601	**1 305 300 914**
LPH 201	**1 305 331 051**
LPH 202	**1 305 331 050**
LPH 481	**1 307 022 918**
LPH 482	**1 307 022 917**
LPH 901	**0 318 012 014**

◀ MARELLI

LPH 902	**0 318 012 013**
LPL 600	**0 301 017 606**
LRA 011	**1 305 621 608**
LRA 012	**1 305 621 607**
LRA 020	**0 307 852 309**
LRA 030	**0 315 202 010**
LRA 040	**0 307 852 314**
LRA 041	**1 305 621 960**
LRA 042	**1 305 621 959**
LRA 050	**0 307 852 312**
LRA 051	**1 305 621 823**
LRA 052	**1 305 621 822**
LRA 060	**0 307 853 301**
LRA 061	**1 305 621 827**
LRA 062	**1 305 621 826**
LRA 071	**1 305 211 901**
LRA 072	**1 305 211 900**
LRA 080	**0 307 870 001**
LRA 090	**1 305 614 005**
LRA 100	**1 305 620 468**
LRA 110	**1 305 620 962**
LRA 111	**1 305 621 905**
LRA 112	**1 305 621 904**
LRA 121	**1 305 620 452**
LRA 131	**1 305 620 482**
LRA 132	**1 305 620 481**
LRA 151	**1 305 621 634**
LRA 152	**1 305 621 633**
LRA 171	**1 305 620 978**
LRA 172	**1 305 620 977**
LRA 191	**1 305 621 144**
LRA 192	**1 305 621 143**
LRA 241	**1 305 210 907**
LRA 242	**1 305 210 906**
LRA 281	**1 305 621 962**
LRA 282	**1 305 621 961**
LRA 291	**1 305 621 978**
LRA 292	**1 305 621 977**
LRA 300	**1 305 620 987**
LRA 301	**1 305 621 577**
LRA 302	**1 305 621 576**
LRA 311	**1 315 630 086**
LRA 312	**1 315 630 085**
LRA 351	**1 305 620 582**
LRA 352	**1 305 620 581**
LRA 361	**1 305 621 994**
LRA 362	**1 305 621 993**
LRA 381	**1 305 621 110**
LRA 382	**1 305 621 109**
LRA 391	**1 305 621 238**
LRA 392	**1 305 621 237**
LRA 471	**1 305 615 904**
LRA 472	**1 305 615 905**
LRA 481	**1 305 621 656**
LRA 482	**1 305 621 655**
LRA 501	**1 305 621 443**
LRA 502	**1 305 621 442**
LUS 4761	**1 305 620 954**
LUS 4771	**1 305 620 956**
LUS 4772	**1 305 620 955**
LUS 4812	**1 315 106 913**
MHL 120	**0 318 004 614**
MHL 121	**0 318 004 613**
MHL 122	**0 318 005 614**
MHL 123	**0 318 005 613**
MHL 124	**0 318 006 614**
MHL 125	**0 318 006 613**
MHL 128	**0 318 021 614**
MHL 130	**0 318 023 614**
MHL 131	**0 318 023 613**
MHL 132	**0 318 023 624**
MHL 133	**0 318 023 623**
MHL 134	**0 318 023 814**
MHL 135	**0 318 023 813**
MHL 138	**0 318 029 614**
MHL 139	**0 318 029 613**
MHL 146	**0 318 037 614**
MHL 147	**0 318 037 613**
MHL 148	**0 318 037 814**
MHL 149	**0 318 037 813**
MHL 150	**0 318 038 604**
MHL 151	**0 318 038 603**
MHL 152	**0 318 038 614**
MHL 153	**0 318 038 613**
MHL 154	**0 318 039 614**
MHL 155	**0 318 039 613**
MHL 2008	**1 307 022 104**
MHL 2009	**1 307 022 103**
MHL 2010	**1 307 022 008**
MHL 2011	**1 307 022 007**
MHL 2016	**1 307 022 201**
MHL 2017	**1 307 022 200**
MHL 2042	**0 301 089 676**
MHL 2043	**0 301 089 675**
MHL 2050	**0 301 048 712**
MHL 2051	**0 301 048 711**
MHL 2078	**0 301 151 404**
MHL 2079	**0 301 151 403**
MHL 2080	**0 301 151 604**
MHL 2081	**0 301 151 603**
MHL 2082	**0 301 150 504**
MHL 2083	**0 301 150 503**
MHL 2084	**0 301 150 704**
MHL 2085	**0 301 150 703**
MHL 2086	**0 301 158 404**
MHL 2087	**0 301 158 403**
MHL 2088	**0 301 158 604**
MHL 2089	**0 301 158 603**
MHL 2150	**0 301 048 702**
MHL 2151	**0 301 048 701**
MHL2154	**0 301 163 604**
MHL2155	**0 301 163 603**
MHL 216	**0 318 108 816**
MHL 217	**0 318 108 815**
MHL 218	**0 318 108 616**
MHL 2182	**0 301 045 614**
MHL 2183	**0 301 045 613**
MHL 2184	**0 301 192 602**
MHL 2185	**0 301 192 601**
MHL 219	**0 318 108 615**
MHL 222	**0 318 108 614**
MHL 223	**0 318 108 613**
MHL 234	**0 318 090 614**
MHL 235	**0 318 090 613**
MHL 238	**0 318 093 624**
MHL 239	**0 318 093 623**
MHL 240	**0 318 095 614**
MHL 241	**0 318 095 613**
MHL 242	**0 318 095 634**
MHL 243	**0 318 095 633**
MHL 252	**0 318 036 614**
MHL 253	**0 318 036 613**
MHL 268	**0 318 083 514**
MHL 269	**0 318 083 513**
MHL 270	**0 318 071 614**
MHL 271	**0 318 071 613**
MHL 274	**0 318 082 814**
MHL 275	**0 318 082 813**
MHL 286	**0 318 108 812**
MHL 287	**0 318 108 811**
MHL 290	**0 318 118 814**
MHL 291	**0 318 118 813**
MHL 3004	**0 301 182 602**
MHL 3005	**0 301 182 601**
MHL 4011	**0 318 028 814**
MHL 4012	**0 318 028 813**
MHL4101	**0 318 126 714**
MHL4102	**0 318 126 713**
MHL 412	**0 318 014 604**
MHL 413	**0 318 014 603**
MHL 414	**0 318 014 614**
MHL 415	**0 318 014 613**
MHL 420	**0 318 016 814**
MHL 4201	**0 301 212 673**
MHL 4202	**0 301 212 674**
MHL 421	**0 318 016 813**
MHL 4241	**0 318 012 514**
MHL 4242	**0 318 012 513**
MHL 4252	**0 318 128 713**
MHL 4261	**0 318 128 716**
MHL 4262	**0 318 128 715**
MHL 4271	**0 318 131 714**
MHL 4272	**0 318 131 713**
MHL 4281	**0 318 131 774**
MHL 4282	**0 318 131 773**
MHL 440	**0 318 097 824**
MHL 441	**0 318 097 823**
MHL 446	**0 318 097 814**
MHL 447	**0 318 097 813**
MHL 452	**0 318 045 514**
MHL 453	**0 318 045 513**
MHL 456	**0 318 047 614**
MHL 457	**0 318 047 613**
MHL 462	**0 318 050 814**
MHL 463	**0 318 050 813**
MHL 472	**0 318 054 616**
MHL 473	**0 318 054 615**
MHL 474	**0 318 054 816**
MHL 475	**0 318 054 815**
MHL476	**0 318 055 614**
MHL477	**0 318 055 613**
MHL478	**0 318 055 814**
MHL479	**0 318 055 813**
MHL 5001	**0 301 213 674**
MHL 5002	**0 301 213 673**
MHL 5021	**0 301 218 672**
MHL 5022	**0 301 218 671**
MHL 5251	**0 301 213 604**
MHL 5252	**0 301 213 603**
MHL 602	**0 318 075 613**
MHL 602	**0 318 075 614**
MHL 603	**0 318 075 613**
MHL 603	**0 318 075 614**
MHL 604	**0 318 083 524**
MHL 605	**0 318 083 523**
MHL 608	**0 318 095 624**
MHL 609	**0 318 095 623**
MHL 610	**0 318 092 624**
MHL 611	**0 318 092 623**
MHL 612	**0 318 093 614**
MHL 613	**0 318 093 613**
MHL 614	**0 318 094 614**
MHL 615	**0 318 094 613**
MHL 616	**0 318 087 614**
MHL 617	**0 318 087 613**
MHL 630	**0 318 091 614**
MHL 631	**0 318 091 613**
MHL 634	**0 318 077 713**
MHL 635	**0 318 077 714**
MHL 648	**0 318 094 624**
MHL 649	**0 318 094 623**
MHL 650	**0 318 045 524**
MHL 651	**0 318 045 523**
MHL 652	**0 318 029 814**
MHL 653	**0 318 029 813**
MHL 658	**0 318 094 824**
MHL 659	**0 318 094 823**
MHL 662	**0 318 108 814**
MHL 663	**0 318 108 813**
MHL 666	**0 318 017 814**

M

MHL 667	**0 318 017 813**
MHL 668	**0 318 077 716**
MHL 669	**0 318 077 715**
MHL 670	**0 318 007 714**
MHL 671	**0 318 007 713**
MHL 672	**0 318 096 814**
MHL 673	**0 318 096 813**
MHL 679	**0 318 051 813**
MHL 680	**0 318 051 814**
MHL 681	**0 318 051 823**
MHL 682	**0 318 051 824**
MHL 683	**0 318 071 813**
MHL 684	**0 318 071 814**
MHL 685	**0 318 098 513**
MHL 686	**0 318 098 514**
MHL 687	**0 318 098 713**
MHL 688	**0 318 098 714**
MHL 695	**0 318 012 713**
MHL 696	**0 318 012 714**
MHL 697	**0 318 012 813**
MHL 698	**0 318 012 814**
MHL 800	**0 318 033 824**
MHL 801	**0 318 033 823**
MHL 802	**0 318 033 834**
MHL 803	**0 318 033 833**
MHL 812	**0 318 079 814**
MHL 813	**0 318 079 813**
MHL 814	**0 318 099 814**
MHL 815	**0 318 099 813**
MHL 816	**0 318 112 714**
MHL 817	**0 318 112 713**
MHL 818	**0 318 112 724**
MHL 819	**0 318 112 723**
MHL 820	**0 318 112 574**
MHL 821	**0 318 112 573**
MHL 824	**0 318 077 814**
MHL 825	**0 318 077 813**
MHL 834	**0 318 113 813**
MHL 835	**0 318 113 814**
MHL836	**0 318 113 816**
MHL837	**0 318 113 815**
MHL 868	**0 318 123 714**
MHL 869	**0 318 123 713**
MHL 870	**0 318 113 714**
MHL 871	**0 318 113 713**
MHL 904	**0 318 007 774**
MHL 905	**0 318 007 773**
MHL 940	**0 301 177 601**
MHL 941	**0 301 177 602**
MHL 970	**0 301 157 611**
MHL 971	**0 301 157 612**
MHL 976	**0 301 088 701**
MHL 977	**0 301 088 702**
MHL 980	**0 318 125 713**
MHL 981	**0 318 125 714**
MHL 986	**0 301 157 605**
MHL 987	**0 301 157 606**
MH 4251	**0 318 128 714**
MKL 100	**1 987 306 033**
MKL 101	**1 987 306 032**
MKL 108	**1 987 306 035**
MKL 109	**1 987 306 034**
MKL 112	**1 987 306 039**
MKL 113	**1 987 306 038**
MKL 114	**1 987 306 041**
MKL 115	**1 987 306 040**
MKL 116	**1 987 306 043**
MKL 117	**1 987 306 042**
MLL 202	**1 305 620 980**
MLL 203	**1 305 620 979**
MLL 206	**1 305 621 907**
MLL 207	**1 305 621 906**
MRL 4001	**0 319 350 116**
MRL 4002	**0 319 350 115**
MRL 4031	**0 319 304 214**
MRL 4032	**0 319 304 213**
MRL 4041	**0 318 318 016**
MRL 4042	**0 318 318 015**
MRL4051	**0 319 337 214**
MRL4052	**0 319 337 213**
MRL 4061	**0 318 348 026**
MRL 4061	**0 319 349 116**
MRL 4062	**0 318 348 025**
MRL 4062	**0 319 349 115**
MRL 4070	**0 318 348 214**
MRL 4070	**0 319 348 214**
MRL 4071	**0 318 348 213**
MRL 4071	**0 319 348 213**
MRL 4131	**0 318 337 008**
MRL 4132	**0 318 337 007**
MRL4271	**0 319 322 214**
MRL4272	**0 319 322 213**
MRL4341	**0 319 336 414**
MRL4342	**0 319 336 413**
MRL 4361	**0 319 347 114**
MRL 4362	**0 319 347 113**
MRL 4371	**0 319 345 004**
MRL 4372	**0 319 345 003**
000 02 802 070 2	**0 318 318 005**
000 02 802 070 4	**0 318 318 015**
000 02 802 080 2	**0 318 318 016**
000 02 802 080 4	**0 318 318 006**
000 41 681 112 9	**0 318 028 814**
000 41 691 112 9	**0 318 028 813**
08002	**0 319 328 203**
08003	**0 319 328 204**
08007	**0 319 328 213**
08008	**0 319 328 214**
08016	**0 319 370 203**
08017	**0 319 370 204**
08166	**0 319 334 103**
08167	**0 319 334 104**
08170	**0 319 333 203**
08171	**0 319 333 204**
08180	**0 319 327 403**
08181	**0 319 327 404**
08184	**0 319 327 405**
08185	**0 319 327 406**
08187	**0 319 329 103**
08188	**0 319 329 104**
08190	**0 319 323 103**
08191	**0 319 323 104**
08222	**0 319 371 203**
08223	**0 319 371 204**
08253	**0 319 336 103**
08254	**0 319 336 114**
08255	**0 319 336 113**
08256	**0 319 336 104**
08257	**0 319 336 203**
08258	**0 319 336 234**
08259	**0 319 336 233**
08260	**0 319 336 204**
08302	**0 319 314 203**
08303	**0 319 314 204**
08304	**0 319 314 213**
08305	**0 319 314 214**
08312	**0 319 312 203**
08313	**0 319 312 206**
08314	**0 319 313 203**
08315	**0 319 313 204**
08390	**0 319 353 203**
08391	**0 319 353 204**
08480	**0 319 327 203**
08481	**0 319 327 204**
08602	**0 319 303 203**
08603	**0 319 303 204**
08972	**0 319 379 103**
08975	**0 319 379 104**
08976	**0 319 378 203**
08979	**0 319 378 204**
12056	**0 319 202 203**
12057	**0 319 202 204**
12288	**0 319 205 203**
12289	**0 319 205 204**
12352	**0 319 601 113**
12353	**0 319 601 114**
12356	**0 319 602 113**
12357	**0 319 602 114**
12395	**0 319 207 203**
12396	**0 319 207 204**
12403	**0 319 201 403**
12404	**0 319 201 404**
12449	**0 319 203 203**
12450	**0 319 203 204**
12460	**0 319 223 103**
12461	**0 319 223 104**
12810	**0 319 602 123**
12811	**0 319 602 124**
12850	**0 319 204 203**
12851	**0 319 204 204**
12940	**0 319 277 203**
12941	**0 319 277 204**
18166	**0 319 334 113**
18180	**0 319 354 105**
18183	**0 319 354 106**
18189	**0 319 355 106**
18190	**0 319 354 103**
18191	**0 319 354 104**
18194	**0 319 355 105**
18196	**0 319 355 103**
18197	**0 319 355 104**
18200	**0 319 369 403**
18201	**0 319 369 404**
18230	**0 319 374 203**
18231	**0 319 374 204**
18240	**0 319 374 205**
18241	**0 319 374 206**
18250	**0 319 326 203**
18251	**0 319 326 204**
18252	**0 319 326 213**
18253	**0 319 326 214**
18260	**0 319 326 205**
18261	**0 319 326 206**
18262	**0 319 326 215**
18263	**0 319 326 216**
18309	**0 319 332 204**
18312	**0 319 332 203**
18319	**0 319 332 104**
18322	**0 319 332 103**
18440	**0 319 321 113**
18441	**0 319 321 114**
18446	**0 319 321 103**
18447	**0 319 321 104**
18557	**0 319 306 203**
18558	**0 319 306 204**
18572	**0 319 359 103**
18573	**0 319 359 104**
187 817 01	**0 319 201 443**
187 818 01	**0 319 201 444**
284 317 01	**0 319 378 243**
284 317 05	**0 319 379 143**
284 318 03	**0 319 378 244**
284 318 07	**0 319 379 144**
284 707 03	**0 319 303 213**
284 708 03	**0 319 303 214**
284 717 02	**0 319 303 253**
284 718 02	**0 319 303 254**
286 307 33	**0 319 336 223**
286 308 31	**0 319 336 224**
287 718 08	**0 319 342 346**

◀ MARELLI

289 008 03	**0 319 334 114**
290 518 02	**0 319 342 146**
290 607 01	**0 319 352 153**
290 607 07	**0 319 352 253**
290 607 09	**0 319 352 343**
290 608 01	**0 319 352 154**
290 608 07	**0 319 352 254**
290 608 09	**0 319 352 354**
290 617 09	**0 319 352 353**
290 618 09	**0 319 352 344**
290 707 01	**0 319 301 203**
290 707 03	**0 319 301 213**
290 708 01	**0 319 301 204**
290 708 03	**0 319 301 214**
290 807 01	**0 319 305 203**
290 807 03	**0 319 305 213**
290 808 01	**0 319 305 204**
290 808 03	**0 319 305 214**
290 817 02	**0 319 305 253**
290 817 12	**0 319 306 245**
290 818 02	**0 319 305 254**
291 508 25	**0 319 312 204**
291 518 05	**0 319 312 146**
292 717 03	**0 319 313 153**
292 718 03	**0 319 313 154**
292 807 01	**0 319 308 213**
292 808 03	**0 319 308 214**
292 907 01	**0 319 308 203**
292 908 01	**0 319 308 204**
32008	**0 319 370 273**
32009	**0 319 370 274**
32079	**0 319 312 173**
32080	**0 319 312 174**
32081	**0 319 313 173**
32082	**0 319 313 174**
32114	**0 319 360 273**
32115	**0 319 360 274**
32178	**0 319 365 173**
32179	**0 319 365 174**
32197	**0 319 356 273**
32233	**0 319 344 173**
32235	**0 319 344 174**
32280	**0 319 358 173**
32281	**0 319 358 174**
32329	**0 319 315 173**
32330	**0 319 315 174**
32335	**0 319 315 273**
32336	**0 319 315 274**
32474	**0 319 367 273**
32475	**0 319 367 274**
348 307 13	**0 319 603 123**
348 308 13	**0 319 603 124**
42001	**0 319 369 443**
42002	**0 319 369 444**
42232	**0 319 329 413**
42233	**0 319 329 414**
42234	**0 319 329 403**
42235	**0 319 329 404**
42422	**0 319 371 243**
42423	**0 319 371 244**
62002	**0 319 342 343**
62003	**0 319 342 344**
62004	**0 319 342 143**
62005	**0 319 342 144**
62006	**0 319 342 243**
62007	**0 319 342 244**
62008	**0 319 342 246**
62012	**0 319 204 243**
62013	**0 319 204 244**
62016	**0 319 370 243**
62017	**0 319 370 244**
62059	**0 319 604 119**
62064	**0 319 376 243**
62066	**0 319 376 244**
62069	**0 319 377 243**
62070	**0 319 377 244**
62105	**0 319 344 143**
62106	**0 319 344 144**
62107	**0 319 344 146**
62127	**0 319 356 243**
62128	**0 319 356 244**
62129	**0 319 356 245**
62131	**0 319 346 248**
62137	**0 319 311 143**
62138	**0 319 311 144**
62145	**0 319 310 253**
62146	**0 319 310 254**
62147	**0 319 310 243**
62161	**0 319 310 244**
62170	**0 319 308 243**
62171	**0 319 308 244**
62172	**0 319 308 253**
62175	**0 319 308 254**
62208	**0 319 323 143**
62209	**0 319 323 144**
62226	**0 319 356 343**
62227	**0 319 356 344**
62228	**0 319 356 345**
62229	**0 319 356 346**
62243	**0 319 360 243**
62244	**0 319 360 244**
62245	**0 319 208 203**
62246	**0 319 208 204**
62280	**0 319 358 143**
62281	**0 319 358 146**
62282	**0 319 358 144**
62285	**0 319 305 243**
62286	**0 319 305 244**
62300	**0 319 311 146**
62301	**0 319 314 153**
62302	**0 319 314 154**
62303	**0 319 314 143**
62304	**0 319 314 144**
62311	**0 319 312 143**
62312	**0 319 312 144**
62314	**0 319 313 143**
62315	**0 319 313 144**
62320	**0 319 603 143**
62321	**0 319 603 144**
62329	**0 319 315 143**
62330	**0 319 315 144**
62331	**0 319 315 253**
62332	**0 319 315 254**
62335	**0 319 315 243**
62336	**0 319 315 244**
62353	**0 319 365 143**
62354	**0 319 365 144**
62363	**0 319 365 443**
62364	**0 319 365 444**
62386	**0 319 352 143**
62387	**0 319 352 144**
62388	**0 319 352 243**
62389	**0 319 352 244**
62390	**0 319 353 243**
62391	**0 319 353 244**
62402	**0 319 301 243**
62403	**0 319 301 253**
62404	**0 319 301 244**
62405	**0 319 301 254**
62411	**0 319 356 246**
62430	**0 319 334 143**
62431	**0 319 334 144**
62453	**0 319 336 143**
62456	**0 319 336 144**
62457	**0 319 336 243**
62460	**0 319 336 244**
62474	**0 319 367 243**
62475	**0 319 367 244**
62476	**0 319 367 245**
62477	**0 319 367 246**
62557	**0 319 306 243**
62558	**0 319 306 244**
62570	**0 319 333 243**
62571	**0 319 333 244**
62572	**0 319 359 143**
62573	**0 319 359 144**
62602	**0 319 303 243**
62603	**0 319 303 244**
62900	**0 319 332 143**
62903	**0 319 332 144**
710 301 017 606	**0 301 017 606**
710 30 103 320 5	**0 301 033 205**
710 30 103 320 6	**0 301 033 206**
710 30 104 540 3	**0 301 045 403**
710 30 104 540 4	**0 301 045 404**
710 301 045 613	**0 301 045 613**
710 301 045 614	**0 301 045 614**
710 30 104 870 1	**0 301 048 701**
710 30 104 870 2	**0 301 048 702**
710 301 048 711	**0 301 048 711**
710 301 048 712	**0 301 048 712**
710 30 105 160 3	**0 301 051 603**
710 30 105 160 4	**0 301 051 604**
710 30 107 371 1	**0 301 073 713**
710 30 107 371 2	**0 301 073 714**
710 301 088 701	**0 301 088 701**
710 301 088 702	**0 301 088 702**
710 30 108 967 5	**0 301 089 675**
710 30 108 967 6	**0 301 089 676**
710 30 115 050 3	**0 301 150 503**
710 30 115 050 4	**0 301 150 504**
710 301 150 703	**0 301 150 703**
710 301 150 704	**0 301 150 704**
710 30 115 140 3	**0 301 151 403**
710 30 115 140 4	**0 301 151 404**
710 301 151 603	**0 301 151 603**
710 301 151 604	**0 301 151 604**
710 301 157 605	**0 301 157 605**
710 301 157 606	**0 301 157 606**
710 301 157 611	**0 301 157 611**
710 301 157 612	**0 301 157 612**
710 30 115 840 3	**0 301 158 403**
710 30 115 840 4	**0 301 158 404**
710 30 115 860 3	**0 301 158 603**
710 30 115 860 4	**0 301 158 604**
710 301 160 603	**0 301 160 603**
710 301 160 604	**0 301 160 604**
710 30 116 360 3	**0 301 163 603**
710 30 116 360 4	**0 301 163 604**
710 301 177 601	**0 301 177 601**
710 301 177 602	**0 301 177 602**
710 301 182 601	**0 301 182 601**
710 301 182 602	**0 301 182 602**
710 301 192 601	**0 301 192 601**
710 301 192 602	**0 301 192 602**
710 301 212 671	**0 301 212 671**
710 301 212 672	**0 301 212 672**
710 30 121 267 3	**0 301 212 673**
710 30 121 267 4	**0 301 212 674**
710 301 213 603	**0 301 213 603**
710 301 213 604	**0 301 213 604**
710 301 213 673	**0 301 213 673**
710 301 213 674	**0 301 213 674**
710 301 218 603	**0 301 218 603**
710 301 218 604	**0 301 218 604**
710 301 218 671	**0 301 218 671**
710 301 218 672	**0 301 218 672**
710 301 218 673	**0 301 218 673**
710 301 218 674	**0 301 218 674**
710 30 130 210 1	**0 301 302 101**

M

710 30 130 210 2	**0 301 302 102**	710 305 074 002	**0 305 074 002**	710 311 327 001	**0 311 327 001**	711 305 233 939	**1 305 233 939**
710 30 130 410 0	**0 301 304 100**	710 305 075 001	**0 305 075 001**	710 311 327 002	**0 311 327 002**	711 305 300 914	**1 305 300 914**
710 30 138 540 1	**0 301 385 401**	710 305 075 002	**0 305 075 002**	710 311 327 005	**0 311 327 005**	711 305 331 050	**1 305 331 050**
710 30 138 540 2	**0 301 385 402**	710 305 076 001	**0 305 076 001**	710 311 327 006	**0 311 327 006**	711 305 331 051	**1 305 331 051**
710 30 138 540 4	**0 301 385 404**	710 305 076 002	**0 305 076 002**	710 31 132 800 1	**0 311 328 001**	711 305 614 005	**1 305 614 005**
710 30 138 550 1	**0 301 385 501**	710 305 077 001	**0 305 077 001**	710 31 132 800 2	**0 311 328 002**	711 305 615 904	**1 305 615 904**
710 30 138 550 2	**0 301 385 502**	710 305 077 002	**0 305 077 002**	710 31 132 800 3	**0 311 328 003**	711 305 615 905	**1 305 615 905**
710 30 138 550 3	**0 301 385 503**	710 305 079 001	**0 305 079 001**	710 31 132 800 4	**0 311 328 004**	711 305 620 452	**1 305 620 452**
710 30 160 310 0	**0 301 603 100**	710 305 079 002	**0 305 079 002**	710 311 329 001	**0 311 329 001**	711 305 620 468	**1 305 620 468**
710 30 168 010 1	**0 301 680 101**	710 305 080 001	**0 305 080 001**	710 311 329 002	**0 311 329 002**	711 305 620 481	**1 305 620 481**
710 30 170 900 9	**0 301 709 009**	710 305 080 002	**0 305 080 002**	710 311 329 003	**0 311 329 003**	711 305 620 482	**1 305 620 482**
710 30 171 010 0	**0 301 710 100**	710 305 081 003	**0 305 081 003**	710 311 329 004	**0 311 329 004**	711 305 620 581	**1 305 620 581**
710 30 181 010 2	**0 301 810 102**	710 305 081 004	**0 305 081 004**	710 311 329 011	**0 311 329 011**	711 305 620 582	**1 305 620 582**
710 30 305 111 1	**0 303 051 111**	710 30 512 000 1	**0 305 120 001**	710 311 329 012	**0 311 329 012**	711 305 620 954	**1 305 620 954**
710 30 500 100 4	**0 305 001 004**	710 30 512 000 2	**0 305 120 002**	710 311 329 013	**0 311 329 013**	711 305 620 955	**1 305 620 955**
710 30 505 000 1	**0 305 050 001**	710 30 512 010 1	**0 305 120 101**	710 311 329 014	**0 311 329 014**	711 305 620 956	**1 305 620 956**
710 30 505 000 2	**0 305 050 002**	710 30 512 010 2	**0 305 120 102**	710 311 330 001	**0 311 330 001**	711 305 620 962	**1 305 620 962**
710 30 505 100 1	**0 305 051 001**	710 30 512 010 6	**0 305 120 106**	710 311 330 002	**0 311 330 002**	711 305 620 977	**1 305 620 977**
710 30 505 100 2	**0 305 051 002**	710 30 530 300 1	**0 305 303 001**	710 311 330 005	**0 311 330 005**	711 305 620 978	**1 305 620 978**
710 30 505 300 1	**0 305 053 001**	710 30 530 300 2	**0 305 303 002**	710 311 330 006	**0 311 330 006**	711 305 620 979	**1 305 620 979**
710 30 505 300 1	**0 305 053 003**	710 30 540 100 1	**0 305 401 001**	710 311 330 007	**0 311 330 007**	711 305 620 980	**1 305 620 980**
710 30 505 300 2	**0 305 053 002**	710 30 540 100 2	**0 305 401 002**	710 311 330 008	**0 311 330 008**	711 305 620 987	**1 305 620 987**
710 30 505 300 2	**0 305 053 004**	710 30 540 100 3	**0 305 401 003**	710 311 332 001	**0 311 332 001**	711 305 621 109	**1 305 621 109**
710 30 505 400 1	**0 305 054 001**	710 30 540 100 4	**0 305 401 004**	710 311 332 002	**0 311 332 002**	711 305 621 110	**1 305 621 110**
710 30 505 400 2	**0 305 054 002**	710 30 540 200 1	**0 305 402 001**	710 31 142 400 3	**0 311 424 003**	711 305 621 143	**1 305 621 143**
710 305 054 011	**0 305 054 011**	710 305 406 001	**0 305 406 001**	710 31 142 400 4	**0 311 424 004**	711 305 621 144	**1 305 621 144**
710 305 054 012	**0 305 054 012**	710 30 540 601 4	**0 305 406 014**	710 31 510 402 5	**0 315 104 025**	711 305 621 237	**1 305 621 237**
710 30 505 600 1	**0 305 056 001**	710 30 545 003 7	**0 305 450 037**	710 31 510 403 3	**0 315 104 033**	711 305 621 238	**1 305 621 238**
710 30 505 600 2	**0 305 056 002**	710 30 545 005 2	**0 305 450 052**	710 31 510 403 4	**0 315 104 034**	711 305 621 442	**1 305 621 442**
710 30 505 800 1	**0 305 058 001**	710 30 560 101 1	**0 305 601 011**	710 31 510 500 1	**0 315 105 001**	711 305 621 443	**1 305 621 443**
710 30 505 800 2	**0 305 058 002**	710 30 560 101 2	**0 305 601 012**	710 31 511 000 3	**0 315 110 003**	711 305 621 576	**1 305 621 576**
710 305 059 001	**0 305 059 001**	710 30 640 300 1	**0 306 403 001**	710 31 511 000 4	**0 315 110 004**	711 305 621 576	**1 305 621 577**
710 305 059 002	**0 305 059 002**	710 30 640 300 2	**0 306 403 002**	710 315 202 010	**0 315 202 010**	711 305 621 607	**1 305 621 607**
710 305 060 001	**0 305 060 001**	710 306 407 001	**0 306 407 001**	711 10 928 111 0	**0 318 590 019**	711 305 621 608	**1 305 621 608**
710 305 060 002	**0 305 060 002**	710 30 660 401 1	**0 306 604 011**	711 14 526 111 0	**1 987 306 401**	711 305 621 633	**1 305 621 633**
710 305 060 003	**0 305 060 003**	710 30 660 401 2	**0 306 604 012**	711 14 985 111 0	**1 987 306 400**	711 305 621 634	**1 305 621 634**
710 305 060 004	**0 305 060 004**	710 307 852 309	**0 307 852 309**	711 30 042 111 0	**0 318 335 004**	711 305 621 655	**1 305 621 655**
710 305 062 003	**0 305 062 003**	710 307 852 312	**0 307 852 312**	711 30 052 111 0	**0 318 335 003**	711 305 621 656	**1 305 621 656**
710 305 062 004	**0 305 062 004**	710 307 852 314	**0 307 852 314**	711 305 210 906	**1 305 210 906**	711 305 621 822	**1 305 621 822**
710 305 063 001	**0 305 063 001**	710 307 853 301	**0 307 853 301**	711 305 210 907	**1 305 210 907**	711 305 621 823	**1 305 621 823**
710 305 063 002	**0 305 063 002**	710 307 853 311	**0 307 853 311**	711 305 211 900	**1 305 211 900**	711 305 621 826	**1 305 621 826**
710 305 063 003	**0 305 063 003**	710 307 853 322	**0 307 853 322**	711 305 211 901	**1 305 211 901**	711 305 621 827	**1 305 621 827**
710 305 063 004	**0 305 063 004**	710 307 870 001	**0 307 870 001**	711 30 523 013 3	**1 305 230 133**	711 305 621 904	**1 305 621 904**
710 305 065 001	**0 305 065 001**	710 31 131 500 1	**0 311 315 001**	711 30 523 013 4	**1 305 230 134**	711 305 621 905	**1 305 621 905**
710 305 065 002	**0 305 065 002**	710 31 131 500 2	**0 311 315 002**	711 305 230 906	**1 305 230 906**	711 305 621 906	**1 305 621 906**
710 305 066 001	**0 305 066 001**	710 31 131 502 1	**0 311 315 021**	711 305 230 907	**1 305 230 907**	711 305 621 907	**1 305 621 907**
710 305 066 002	**0 305 066 002**	710 31 131 502 2	**0 311 315 022**	711 305 230 916	**1 305 230 916**	711 305 621 959	**1 305 621 959**
710 30 506 800 3	**0 305 062 003**	710 31 131 503 1	**0 311 315 031**	711 305 230 917	**1 305 230 917**	711 305 621 960	**1 305 621 960**
710 30 506 800 3	**0 305 068 003**	710 31 131 503 2	**0 311 315 032**	711 305 232 923	**1 305 232 923**	711 305 621 961	**1 305 621 961**
710 30 506 800 4	**0 305 068 004**	710 31 131 900 1	**0 311 319 001**	711 305 232 924	**1 305 232 924**	711 305 621 962	**1 305 621 962**
710 305 069 001	**0 305 069 001**	710 31 131 900 2	**0 311 319 002**	711 305 233 920	**1 305 233 920**	711 305 621 977	**1 305 621 977**
710 305 069 002	**0 305 069 002**	710 31 132 200 3	**0 311 322 003**	711 305 233 921	**1 305 233 921**	711 305 621 978	**1 305 621 978**
710 305 070 001	**0 305 070 001**	710 31 132 200 4	**0 311 322 004**	711 305 233 936	**1 305 233 936**	711 305 621 993	**1 305 621 993**
710 305 070 002	**0 305 070 002**	710 31 132 500 5	**0 311 325 005**	711 305 233 937	**1 305 233 937**	711 305 621 994	**1 305 621 994**
710 305 074 001	**0 305 074 001**	710 31 132 500 6	**0 311 325 006**	711 305 233 938	**1 305 233 938**	711 307 022 005	**1 307 022 005**

◀ MARELLI

711 307 022 006	**1 307 022 006**
711 307 022 007	**1 307 022 007**
711 307 022 008	**1 307 022 008**
711 307 022 025	**1 307 022 025**
711 307 022 026	**1 307 022 026**
711 30 702 206 5	**1 307 022 065**
711 307 022 101	**1 307 022 101**
711 307 022 102	**1 307 022 102**
711 307 022 103	**1 307 022 103**
711 307 022 104	**1 307 022 104**
711 307 022 129	**1 307 022 129**
711 307 022 130	**1 307 022 130**
711 307 022 134	**1 307 022 134**
711 30 702 217 4	**1 307 022 174**
711 30 702 217 5	**1 307 022 175**
711 30 702 219 4	**1 307 022 194**
711 30 702 219 5	**1 307 022 195**
711 307 022 200	**1 307 022 200**
711 307 022 201	**1 307 022 201**
711 307 022 645	**1 307 022 645**
711 307 022 646	**1 307 022 646**
711 307 022 917	**1 307 022 917**
711 307 022 918	**1 307 022 918**
711 307 329 066	**1 307 329 066**
711 30 880 111 0	**0 318 221 004**
711 30 882 111 0	**0 318 221 204**
711 30 893 111 0	**0 318 221 003**
711 30 894 111 0	**0 318 221 203**
711 30 950 111 0	**0 318 336 103**
711 31 053 111 0	**0 318 311 013**
711 315 106 910	**1 315 106 910**
711 315 106 911	**1 315 106 911**
711 315 106 913	**1 315 106 913**
711 315 106 916	**1 315 106 916**
711 315 106 917	**1 315 106 917**
711 31 510 691 8	**1 315 106 918**
711 31 510 691 9	**1 315 106 919**
711 315 106 951	**1 315 106 951**
711 315 106 952	**1 315 106 952**
711 31 551 111 0	**0 318 503 009**
711 31 555 111 0	**0 318 436 009**
711 315 630 085	**1 315 630 085**
711 315 630 086	**1 315 630 086**
711 32 083 111 0	**0 318 302 204**
711 32 093 111 0	**0 318 302 203**
711 32 141 111 0	**0 318 014 604**
711 32 143 111 0	**0 318 014 614**
711 32 151 111 0	**0 318 014 603**
711 32 153 111 0	**0 318 014 613**
711 32 162 111 0	**0 318 429 004**
711 32 172 111 0	**0 318 429 003**
711 32 291 111 0	**0 318 490 089**
711 32 331 111 0	**0 318 490 069**
711 32 620 111 0	**0 318 590 009**
711 32 642 111 0	**0 318 413 004**
711 32 652 111 0	**0 318 413 003**
711 32 730 111 0	**0 318 501 004**
711 32 735 111 0	**0 318 426 014**
711 32 736 111 0	**0 318 501 014**
711 32 740 111 0	**0 318 501 003**
711 32 745 111 0	**0 318 426 013**
711 32 746 111 0	**0 318 501 013**
711 32 803 111 0	**0 318 036 614**
711 32 813 111 0	**0 318 036 613**
711 33 044 111 0	**0 318 418 004**
711 33 054 111 0	**0 318 418 003**
711 33 090 111 0	**0 318 433 004**
711 33 091 111 0	**0 318 433 104**
711 33 092 111 0	**0 318 502 004**
711 33 100 111 0	**0 318 433 003**
711 33 101 111 0	**0 318 433 103**
711 33 102 111 0	**0 318 502 003**
711 33 211 111 0	**0 318 325 204**
711 33 221 111 0	**0 318 325 203**
711 33 681 111 0	**0 318 437 004**
711 33 691 111 0	**0 318 437 003**
711 33 722 111 0	**0 318 406 004**
711 33 732 111 0	**0 318 406 003**
711 33 820 111 0	**0 318 425 004**
711 33 830 111 0	**0 318 425 003**
711 35 320 111 0	**0 318 311 004**
711 35 330 111 0	**0 318 311 003**
711 36 260 111 9	**0 318 234 214**
711 36 270 111 9	**0 318 234 213**
712 00 311 20	**1 307 022 071**
712 028 020 122	**0 318 318 007**
712 028 020 224	**0 318 318 008**
712 028 020 702	**0 318 318 005**
712 028 020 704	**0 318 318 015**
712 028 020 802	**0 318 318 016**
712 028 020 804	**0 318 318 006**
712 02 810 000 9	**0 318 490 009**
712 02 814 000 9	**0 318 403 004**
712 02 815 000 9	**0 318 403 003**
712 02 844 000 9	**0 318 420 004**
712 02 845 000 9	**0 318 420 003**
712 03 766 000 9	**1 307 022 067**
712 03 767 000 9	**1 307 022 066**
712 05 052 000 9	**0 318 023 624**
712 05 053 000 9	**0 318 023 623**
712 05 056 000 9	**0 318 023 814**
712 05 057 000 9	**0 318 023 813**
712 05 284 112 9	**0 318 006 614**
712 05 285 112 9	**0 318 006 613**
712 05 424 112 9	**0 318 004 614**
712 05 425 112 9	**0 318 004 613**
712 05 552 000 9	**0 318 023 614**
712 05 553 000 9	**0 318 023 613**
712 05 750 000 9	**0 301 020 602**
712 05 751 000 9	**0 301 020 601**
712 05 754 000 9	**0 301 025 604**
712 05 755 000 9	**0 301 025 603**
712 05 846 000 9	**0 318 038 614**
712 05 847 000 9	**0 318 038 613**
712 06 586 000 9	**0 318 405 004**
712 06 587 000 9	**0 318 405 003**
712 06 828 000 9	**0 318 490 039**
712 07 846 832 9	**1 987 306 100**
712 08 846 000 9	**0 318 038 604**
712 08 847 000 9	**0 318 038 603**
712 11 108 894 9	**1 987 306 210**
712 11 109 894 9	**1 987 306 209**
712 11 304 000 9	**0 318 219 204**
712 11 305 000 9	**0 318 219 203**
712 11 580 894 9	**1 987 306 212**
712 11 581 894 9	**1 987 306 211**
712 11 584 898 9	**1 987 306 214**
712 11 585 898 9	**1 987 306 213**
712 12 871 000 9	**0 318 338 003**
712 12 872 000 9	**0 318 338 004**
712 12 875 000 9	**0 318 338 013**
712 12 876 000 9	**0 318 338 014**
712 16 100 899 9	**1 987 306 208**
712 16 101 899 9	**1 987 306 207**
712 16 106 898 9	**1 987 306 206**
712 16 107 898 9	**1 987 306 205**
712 16 284 000 9	**0 318 204 004**
712 16 285 000 9	**0 318 204 003**
712 16 290 000 9	**0 318 204 204**
712 16 291 000 9	**0 318 204 203**
712 16 304 000 9	**0 318 219 004**
712 16 305 000 9	**0 318 219 003**
712 16 424 000 9	**0 318 202 004**
712 16 425 000 9	**0 318 202 003**
712 16 430 000 9	**0 318 202 204**
712 16 431 000 9	**0 318 202 203**
712 16 464 000 9	**0 318 203 004**
712 16 465 000 9	**0 318 203 003**
712 16 466 000 9	**0 318 203 204**
712 16 467 000 9	**0 318 203 203**
712 16 552 000 9	**0 318 212 204**
712 16 553 000 9	**0 318 212 203**
712 16 588 898 9	**0 318 205 204**
712 16 589 898 9	**0 318 205 203**
712 16 766 000 9	**1 305 231 029**
712 16 767 000 9	**1 305 231 028**
712 201 101 110	**0 318 350 304**
712 201 201 110	**0 318 350 303**
712 20 130 111 0	**0 318 351 124**
712 20 135 111 0	**0 318 351 104**
712 20 136 111 0	**0 318 351 114**
712 20 140 111 0	**0 318 351 123**
712 20 145 111 0	**0 318 351 103**
712 20 146 111 0	**0 318 351 113**
712 32 961 111 0	**0 318 230 204**
712 32 962 112 9	**0 318 230 214**
712 32 971 111 0	**0 318 230 203**
712 32 972 112 9	**0 318 230 213**
712 33 150 111 0	**0 318 218 204**
712 33 160 111 0	**0 318 218 203**
712 33 270 112 0	**0 318 228 204**
712 33 280 112 0	**0 318 228 203**
712 33 462 112 9	**0 318 039 614**
712 33 472 112 9	**0 318 039 613**
712 33 480 111 0	**0 318 222 004**
712 33 481 111 0	**0 318 222 204**
712 33 490 111 0	**0 318 222 003**
712 33 491 111 0	**0 318 222 203**
712 33 700 111 0	**0 318 417 004**
712 33 710 111 0	**0 318 417 003**
712 33 740 112 0	**0 318 303 204**
712 33 741 112 0	**0 318 303 004**
712 33 745 112 9	**0 318 303 014**
712 33 750 112 0	**0 318 303 203**
712 33 751 112 0	**0 318 303 003**
712 33 760 112 0	**0 318 303 509**
712 33 761 112 9	**0 318 303 519**
712 33 807 112 9	**0 318 054 816**
712 33 808 112 9	**0 318 054 616**
712 33 817 112 9	**0 318 054 815**
712 33 818 112 9	**0 318 054 615**
712 33 860 112 9	**0 318 226 204**
712 33 870 112 9	**0 318 226 203**
712 33 880 111 0	**0 318 421 004**
712 33 890 111 0	**0 318 421 003**
712 33 900 111 0	**0 318 324 204**
712 33 910 111 0	**0 318 324 203**
712 33 940 111 0	**0 318 326 204**
712 33 950 111 0	**0 318 326 203**
712 34 284 112 9	**0 318 413 014**
712 34 294 112 9	**0 318 413 013**
712 34 400 112 0	**0 318 208 204**
712 34 410 112 0	**0 318 208 203**
712 34 700 112 0	**0 318 438 004**
712 34 710 112 0	**0 318 438 003**
712 35 013 112 0	**1 307 022 070**
712 35 090 112 0	**0 318 423 003**
712 35 246 112 9	**0 318 021 614**
712 35 260 112 0	**0 318 402 004**
712 35 270 112 0	**0 318 402 003**
712 35 420 112 9	**0 318 227 214**
712 35 421 112 9	**0 318 227 204**
712 35 430 112 9	**0 318 227 213**
712 35 431 112 9	**0 318 227 203**
712 35 460 896 9	**1 987 306 216**
712 35 470 896 9	**1 987 306 215**
712 35 520 112 9	**0 318 410 004**
712 35 530 112 9	**0 318 410 003**
712 35 560 112 0	**0 318 403 014**
712 35 570 112 0	**0 318 403 013**

712 35 600 112 9	**0 318 211 004**
712 35 610 112 9	**0 318 211 003**
712 35 640 112 9	**0 318 206 204**
712 35 650 112 9	**0 318 206 203**
712 35 681 112 9	**0 318 016 814**
712 35 691 112 9	**0 318 016 813**
712 35 700 112 9	**0 318 209 204**
712 35 710 112 9	**0 318 209 203**
712 35 800 112 9	**0 318 430 004**
712 35 810 112 9	**0 318 430 003**
712 35 840 112 9	**0 318 234 204**
712 35 850 112 9	**0 318 234 203**
712 35 887 112 9	**0 318 055 814**
712 35 888 112 9	**0 318 055 614**
712 35 897 112 9	**0 318 055 813**
712 35 898 112 9	**0 318 055 613**
712 35 962 112 9	**0 318 005 614**
712 35 972 112 9	**0 318 005 613**
712 36 000 112 9	**0 318 411 004**
712 36 010 112 9	**0 318 411 003**
712 36 020 112 9	**0 318 427 004**
712 36 030 112 9	**0 318 427 003**
712 36 080 112 9	**0 318 203 014**
712 36 090 112 9	**0 318 203 013**
712 36 100 112 9	**0 318 203 214**
712 36 110 112 9	**0 318 203 213**
712 36 162 112 9	**0 318 017 814**
712 36 172 112 9	**0 318 017 813**
712 36 180 112 9	**0 318 210 204**
712 36 190 112 9	**0 318 210 203**
712 36 280 112 9	**0 318 401 004**
712 36 290 112 9	**0 318 401 003**
712 36 360 112 9	**0 318 415 004**
712 36 370 112 9	**0 318 415 003**
712 36 380 112 9	**0 318 304 004**
712 36 390 112 9	**0 318 304 003**
712 36 400 112 9	**0 318 304 104**
712 36 410 112 9	**0 318 304 103**
712 36 420 112 9	**0 318 437 006**
712 36 430 112 9	**0 318 437 005**
712 36 466 112 9	**0 318 029 614**
712 36 476 112 9	**0 318 029 613**
712 36 480 112 9	**0 318 214 004**
712 36 481 112 9	**0 318 214 204**
712 36 483 112 9	**0 318 215 404**
712 36 490 112 9	**0 318 214 003**
712 36 491 112 9	**0 318 214 203**
712 36 493 112 9	**0 318 215 403**
712 36 500 112 9	**0 318 319 204**
712 36 510 112 9	**0 318 319 203**
712 36 580 112 9	**0 318 332 204**
712 36 581 112 9	**0 318 332 214**
712 36 590 112 9	**0 318 332 203**
712 36 591 112 9	**0 318 332 213**
712 36 600 112 9	**0 318 332 304**
712 36 610 112 9	**0 318 332 303**
712 36 720 111 9	**0 318 337 002**
712 36 720 848 9	**1 987 306 324**
712 36 721 111 9	**0 318 337 004**
712 36 730 111 9	**0 318 337 003**
712 36 730 848 9	**1 987 306 323**
712 36 800 112 9	**0 318 417 014**
712 36 810 112 9	**0 318 417 013**
712 36 820 112 9	**0 318 407 004**
712 36 830 112 9	**0 318 407 003**
712 36 840 112 9	**0 318 419 004**
712 36 843 112 9	**0 318 424 004**
712 36 850 112 9	**0 318 419 003**
712 36 853 112 9	**0 318 424 003**
712 36 884 112 9	**0 318 037 614**
712 36 885 112 9	**0 318 037 814**
712 36 894 112 9	**0 318 037 613**
712 36 895 112 9	**0 318 037 813**
712 36 950 112 9	**0 318 490 059**
712 36 960 112 9	**0 318 342 004**
712 36 960 899 9	**1 987 306 326**
712 36 970 112 9	**0 318 342 003**
712 36 970 899 9	**1 987 306 325**
712 37 020 112 9	**0 318 408 004**
712 37 021 112 9	**0 318 408 014**
712 37 030 112 9	**0 318 408 003**
712 37 031 112 9	**0 318 408 013**
712 37 040 112 9	**0 318 490 029**
712 37 080 112 9	**0 318 434 004**
712 37 090 112 9	**0 318 434 003**
712 37 141 112 9	**0 318 235 204**
712 37 151 112 9	**0 318 235 203**
712 37 180 112 9	**0 318 305 004**
712 37 190 112 9	**0 318 305 003**
712 37 200 112 9	**0 318 313 204**
712 37 210 112 9	**0 318 313 203**
712 37 280 112 9	**0 318 435 004**
712 37 281 112 9	**0 318 435 006**
712 37 290 112 9	**0 318 435 003**
712 37 291 112 9	**0 318 435 005**
712 37 322 112 9	**0 318 118 814**
712 37 332 112 9	**0 318 118 813**
712 37 340 112 9	**0 318 412 004**
712 37 350 112 9	**0 318 412 003**
712 37 360 841 9	**1 987 306 004**
712 37 360 987 9	**0 318 339 204**
712 37 361 987 9	**0 318 339 214**
712 37 370 841 9	**1 987 306 003**
712 37 370 987 9	**0 318 339 203**
712 37 371 987 9	**0 318 339 213**
712 37 380 112 9	**0 318 341 304**
712 37 390 112 9	**0 318 341 303**
712 37 400 112 9	**0 318 341 204**
712 37 410 112 9	**0 318 341 203**
712 37 460 112 9	**0 318 431 004**
712 37 470 112 9	**0 318 431 003**
712 37 520 112 9	**0 318 409 004**
712 37 530 112 9	**0 318 409 003**
712 37 541 112 9	**0 318 012 714**
712 37 551 112 9	**0 318 012 713**
712 37 561 112 9	**0 318 012 814**
712 37 571 112 9	**0 318 012 813**
712 37 640 987 9	**0 318 339 224**
712 37 641 987 9	**0 318 339 234**
712 37 650 841 9	**1 987 306 005**
712 37 650 987 9	**0 318 339 223**
712 37 651 987 9	**0 318 339 233**
712 37 740 112 9	**0 318 348 104**
712 377 421 129	**0 318 348 204**
712 377 421 129	**0 319 348 204**
712 377 441 129	**0 318 348 214**
712 377 441 129	**0 319 348 214**
712 37 750 112 9	**0 318 348 103**
712 377 521 129	**0 318 348 203**
712 377 521 129	**0 319 348 203**
712 377 541 129	**0 318 348 213**
712 377 541 129	**0 319 348 213**
712 37 780 112 9	**0 318 428 004**
712 37 790 112 9	**0 318 428 003**
712 38 020 840 9	**1 987 306 007**
712 38 020 845 9	**1 987 306 010**
712 38 020 849 9	**0 318 345 004**
712 38 030 840 9	**1 987 306 008**
712 38 030 845 9	**1 987 306 009**
712 38 030 849 9	**0 318 345 003**
712 38 040 112 9	**0 318 347 204**
712 38 050 112 9	**0 318 347 203**
712 38 060 112 9	**0 318 334 204**
712 38 070 112 9	**0 318 334 203**
712 38 140 112 9	**0 318 306 104**
712 38 150 112 9	**0 318 306 103**
712 38 160 112 9	**0 318 306 004**
712 38 170 112 9	**0 318 306 003**
712 38 201 112 9	**0 318 079 814**
712 38 211 112 9	**0 318 079 813**
712 38 220 112 9	**0 318 239 004**
712 38 222 112 9	**0 318 237 204**
712 38 230 112 9	**0 318 239 003**
712 38 232 112 9	**0 318 237 203**
712 38 234 112 9	**0 318 239 006**
712 382 441 129	**0 318 239 005**
712 38 260 112 9	**0 318 404 004**
712 38 270 112 9	**0 318 404 003**
712 38 360 952 9	**1 987 306 114**
712 38 421 111 9	**0 318 007 714**
712 38 431 111 9	**0 318 007 713**
712 38 480 112 9	**0 318 334 214**
712 38 490 112 9	**0 318 334 213**
712 38 564 112 9	**0 318 213 004**
712 38 574 112 9	**0 318 213 003**
712 38 600 112 9	**0 318 317 014**
712 38 610 112 9	**0 318 317 013**
712 38 620 112 9	**0 318 323 004**
712 38 630 112 9	**0 318 323 003**
712 38 640 112 9	**0 318 317 004**
712 38 650 112 9	**0 318 317 003**
712 38 805 112 9	**0 318 216 004**
712 38 815 112 9	**0 318 216 003**
712 38 825 112 9	**0 318 033 834**
712 38 827 112 9	**0 318 033 824**
712 38 835 112 9	**0 318 033 833**
712 38 837 112 9	**0 318 033 823**
712 38 890 112 9	**1 987 306 027**
712 39 040 112 9	**0 318 410 014**
712 39 050 112 9	**0 318 410 013**
712 39 140 845 9	**1 987 306 012**
712 39 140 847 9	**0 318 346 204**
712 39 150 845 9	**1 987 306 011**
712 39 150 847 9	**0 318 346 203**
712 39 390 111 9	**0 318 341 001**
712 39 680 111 9	**0 318 341 002**
712 39 680 112 9	**0 318 322 004**
712 39 690 112 9	**0 318 322 003**
712 39 700 112 9	**0 318 307 004**
712 39 710 112 9	**0 318 307 003**
712 39 720 112 9	**0 318 307 509**
712 39 740 112 9	**0 318 216 009**
712 39 766 112 9	**0 318 029 814**
712 39 776 112 9	**0 318 029 813**
712 39 841 112 9	**0 318 096 814**
712 39 851 112 9	**0 318 096 813**
712 39 860 112 9	**0 318 244 204**
712 39 870 112 9	**0 318 244 203**
712 40 020 112 9	**0 318 414 004**
712 40 030 112 9	**0 318 414 003**
712 40 080 112 9	**0 318 231 204**
712 40 090 112 9	**0 318 231 203**
712 40 100 112 9	**0 318 333 214**
712 40 110 112 9	**0 318 333 213**
712 40 120 112 9	**0 318 333 304**
712 40 130 112 9	**0 318 333 303**
712 40 140 112 9	**0 318 333 204**
712 40 150 112 9	**0 318 333 203**
712 40 341 112 9	**0 318 099 814**
712 40 351 112 9	**0 318 099 813**
712 40 381 112 9	**0 318 113 813**
712 40 385 112 9	**0 318 113 816**
712 40 391 112 9	**0 318 113 814**
712 40 395 112 9	**0 318 113 815**
712 405 939 8	**0 318 071 614**
712 40 610 112 0	**0 318 350 203**
712 40 610 112 0	**0 318 350 204**
712 40 741 112 9	**0 318 339 244**
712 40 750 112 9	**0 318 339 243**
712 40 760 112 9	**0 318 226 206**

◀ MARELLI

712 40 770 112 9	**0 318 226 205**
712 40 783 112 9	**0 318 122 714**
712 40 793 112 9	**0 318 122 713**
712 40 900 112 9	**0 318 216 204**
712 40 910 112 9	**0 318 216 203**
712 40 923 112 9	**0 318 122 716**
712 40 933 112 9	**0 318 122 715**
712 41 070 112 9	**0 318 490 129**
712 41 100 112 9	**0 318 432 006**
712 41 110 112 9	**0 318 432 005**
712 41 120 11 29	**0 318 235 104**
712 41 130 11 29	**0 318 235 103**
712 41 180 112 9	**0 318 439 009**
712 41 201 112 9	**0 318 123 714**
712 41 211 112 9	**0 318 123 713**
712 41 240 112 9	**0 318 490 119**
712 41 260 112 9	**0 318 337 104**
712 41 270 112 9	**0 318 337 103**
712 41 280 112 9	**0 318 307 104**
712 41 290 112 9	**0 318 307 103**
712 41 541 112 9	**0 318 113 714**
712 41 551 112 9	**0 318 113 713**
712 41 563 112 9	**0 318 007 774**
712 41 573 112 9	**0 318 007 773**
712 41 581 112 9	**0 318 125 714**
712 41 591 122 9	**0 318 125 713**
712 41 661 112 9	**0 318 249 204**
712 41 671 112 9	**0 318 249 203**
712 416 811 129	**0 318 028 814**
712 416 911 129	**0 318 028 813**
712 41 945 112 9	**0 318 126 714**
712 41 955 112 9	**0 318 126 713**
712 41 985 112 9	**0 318 123 814**
712 41 995 112 9	**0 318 123 813**
712 42 060 112 9	**0 318 432 008**
712 42 070 112 9	**0 318 432 007**
712 42 100 112 9	**0 318 337 006**
712 42 101 112 9	**0 318 337 008**
712 42 110 112 9	**0 318 337 005**
712 42 111 112 9	**0 318 337 007**
712 42 160 112 9	**0 318 434 006**
712 42 170 112 9	**0 318 434 005**
712 42 227 112 9	**0 318 128 714**
712 42 228 112 9	**0 318 128 716**
712 42 237 112 9	**0 318 128 713**
712 42 238 112 9	**0 318 128 715**
712 42 541 112 9	**0 318 133 714**
712 42 546 112 9	**0 318 133 574**
712 425 481 129	**0 318 133 576**
712 425 482 129	**0 318 133 576**
712 42 551 112 9	**0 318 133 713**
712 42 556 112 9	**0 318 133 573**
712 425 581 129	**0 318 133 575**
712 425 582 129	**0 318 133 575**
712 42 646 112 9	**0 318 129 774**
712 42 656 112 9	**0 318 129 773**
712 42 660 112 9	**0 318 440 004**
712 42 670 112 9	**0 318 440 003**
712 42 825 112 9	**0 318 132 714**
712 42 835 112 9	**0 318 132 713**
712 42 845 112 9	**0 318 132 574**
712 42 855 112 9	**0 318 132 573**
712 42 880 112 9	**0 318 012 014**
712 42 881 112 9	**0 318 012 514**
712 42 890 112 9	**0 318 012 013**
712 42 891 112 9	**0 318 012 513**
712 429 661 129	**0 318 131 714**
712 429 761 129	**0 318 131 713**
712 429 861 129	**0 318 131 774**
712 429 961 129	**0 318 131 773**
712 433 601 129	**0 318 441 004**
712 433 701 129	**0 318 441 003**
712 45 160 112 9	**0 318 442 009**
712 45 165 112 9	**0 318 504 009**
712 45 242 112 9	**0 318 148 514**
712 45 243 112 9	**0 318 148 714**
712 45 252 112 9	**0 318 148 513**
712 45 253 112 9	**0 318 148 713**
712 45 520 112 9	**0 318 145 014**
712 45 530 112 9	**0 318 145 013**
712 70 512 000 0	**0 318 211 204**
712 70 513 000 0	**0 318 211 203**
712 70 530 000 0	**0 318 314 004**
712 70 531 000 0	**0 318 314 003**
712 70 534 000 0	**0 318 314 204**
712 70 535 000 0	**0 318 314 203**
712 75 405 852 5	**0 318 083 514**
712 75 405 852 6	**0 318 083 513**
712 75 405 857 7	**0 318 071 614**
712 75 405 857 8	**0 318 071 613**
712 75 405 869 5	**0 318 108 816**
712 75 405 869 6	**0 318 108 815**
712 75 405 869 7	**0 318 108 615**
712 75 405 869 8	**0 318 108 616**
712 75 405 873 6	**0 318 108 614**
712 75 405 873 7	**0 318 108 613**
712 75 405 873 8	**0 318 108 814**
712 75 405 873 9	**0 318 108 813**
712 75 405 874 0	**0 318 108 812**
712 75 405 874 1	**0 318 108 811**
712 75 405 874 8	**0 318 092 624**
712 75 405 874 9	**0 318 092 623**
712 75 405 875 4	**0 318 093 613**
712 75 405 875 5	**0 318 093 614**
712 75 405 875 6	**0 318 093 623**
712 75 405 875 7	**0 318 093 624**
712 75 405 875 8	**0 318 095 633**
712 75 405 875 9	**0 318 095 634**
712 75 405 876 2	**0 318 095 613**
712 75 405 876 3	**0 318 095 614**
712 75 405 876 6	**0 318 090 613**
712 75 405 876 7	**0 318 090 614**
712 75 405 877 0	**0 318 091 613**
712 75 405 877 1	**0 318 091 614**
712 75 405 877 8	**0 318 077 715**
712 75 405 877 9	**0 318 077 716**
712 75 405 878 0	**0 318 077 714**
712 75 405 878 1	**0 318 077 713**
712 75 405 879 2	**0 318 095 623**
712 75 405 879 3	**0 318 095 624**
712 75 405 881 9	**0 318 047 614**
712 75 405 882 0	**0 318 047 613**
712 75 405 883 1	**0 318 087 614**
712 75 405 883 2	**0 318 087 613**
712 75 405 883 8	**0 318 045 513**
712 75 405 883 9	**0 318 045 514**
712 75 405 884 4	**0 318 094 613**
712 75 405 884 5	**0 318 094 614**
712 75 405 884 8	**0 318 050 813**
712 75 405 884 9	**0 318 050 814**
712 75 405 888 0	**0 318 075 613**
712 754 058 880	**0 318 075 614**
712 754 058 881	**0 318 075 613**
712 75 405 888 1	**0 318 075 614**
712 75 405 890 5	**1 987 306 013**
712 75 405 890 6	**1 987 306 014**
712 75 405 890 9	**0 318 245 204**
712 75 405 891 0	**0 318 245 203**
712 75 405 892 4	**0 318 045 524**
712 75 405 892 5	**0 318 045 523**
712 75 405 892 6	**0 318 097 814**
712 75 405 892 7	**0 318 097 813**
712 75 405 892 8	**0 318 097 824**
712 75 405 892 9	**0 318 097 823**
712 754 058 959	**1 305 621 237**
712 754 058 960	**1 305 621 238**
712 75 405 897 7	**1 987 306 018**
712 75 405 899 3	**0 318 094 624**
712 75 405 899 4	**0 318 094 623**
712 754 059 051	**0 318 071 614**
712 754 059 052	**0 318 071 613**
712 75 405 905 5	**1 987 306 037**
712 75 405 905 7	**1 987 306 036**
712 75 405 905 9	**0 318 082 814**
712 75 405 906 0	**0 318 082 813**
712 75 405 906 1	**1 987 306 035**
712 75 405 906 2	**1 987 306 034**
712 75 405 906 4	**0 318 083 524**
712 75 405 906 5	**0 318 083 523**
712 75 405 906 8	**1 987 306 039**
712 75 405 906 9	**1 987 306 038**
712 75 405 907 9	**1 987 306 040**
712 75 405 908	**1 987 306 041**
712 754 059 080	**1 987 306 041**
712 75 405 908 1	**1 987 306 042**
712 75 405 908 2	**1 987 306 043**
712 754 059 083	**1 305 621 577**
712 754 059 084	**1 305 621 576**
712 75 405 910 5	**0 318 331 004**
712 75 405 910 6	**0 318 331 003**
712 75 405 911 1	**0 318 344 014**
712 75 405 911 2	**0 318 344 013**
712 75 405 912 7	**0 318 241 203**
712 75 405 912 8	**0 318 241 204**
712 75 405 912 9	**0 318 242 203**
712 75 405 913 0	**0 318 242 204**
712 75 405 913 1	**0 318 243 203**
712 75 405 913 2	**0 318 243 204**
712 75 405 914 3	**0 318 229 004**
712 75 405 914 4	**0 318 229 003**
712 75 405 921 1	**0 318 094 824**
712 75 405 921 2	**0 318 094 823**
712 75 405 929 0	**0 318 051 814**
712 75 405 929 1	**0 318 051 813**
712 75 405 930 5	**0 318 422 004**
712 75 405 930 7	**0 318 422 014**
712 75 405 930 8	**0 318 422 013**
712 75 405 931 2	**0 318 098 714**
712 75 405 931 3	**0 318 098 713**
712 75 405 931 4	**0 318 098 514**
712 75 405 931 5	**0 318 098 513**
712 75 405 932 3	**0 318 236 204**
712 75 405 933 4	**0 318 051 824**
712 75 405 933 5	**0 318 051 823**
712 75 405 935 0	**0 318 071 814**
712 75 405 935 1	**0 318 071 813**
712 75 405 938 4	**0 318 077 814**
712 75 405 938 5	**0 318 077 813**
712 75 405 939 9	**0 318 071 613**
712 75 405 940 0	**0 318 112 714**
712 75 405 940 1	**0 318 112 713**
712 75 405 940 2	**0 318 112 724**
712 75 405 940 3	**0 318 112 723**
712 75 405 940 4	**0 318 112 574**
712 75 405 940 5	**0 318 112 573**
712 75 453 073 1	**1 987 306 033**
712 75 453 073 2	**1 987 306 032**
713 30 140 112 9	**0 986 701 042**
713 30 150 112 9	**0 986 701 041**
713 30 200 112 9	**0 986 701 122**
713 30 210 112 9	**0 986 701 121**
713 30 300 112 9	**0 986 702 132**
713 30 310 112 9	**0 986 702 131**
713 30 320 112 9	**0 986 703 132**
713 30 330 112 9	**0 986 703 131**
713 30 340 112 9	**0 986 704 132**
713 30 350 112 9	**0 986 704 131**
713 30 360 112 9	**0 986 704 034**
713 30 370 112 9	**0 986 704 033**
713 30 400 112 9	**0 986 702 062**

M

713 30 410 112 9	**0 986 702 061**
713 30 500 112 9	**0 986 702 272**
713 30 510 112 9	**0 986 702 271**
714 000 008 190	**0 319 323 103**
714 000 008 191	**0 319 323 104**
714 000 012 860	**0 319 206 203**
714 000 012 861	**0 319 206 204**
714 000 022 002	**0 319 209 103**
714 000 022 003	**0 319 209 104**
714 000 022 004	**0 319 209 203**
714 000 022 005	**0 319 209 204**
714 000 022 006	**0 319 209 403**
714 000 022 007	**0 319 209 404**
714 000 028 190	**0 319 361 203**
714 000 028 193	**0 319 361 204**
714 000 028 300	**0 319 363 203**
714 000 028 301	**0 319 363 204**
714 000 028 340	**0 319 321 203**
714 000 028 341	**0 319 321 204**
714 000 062 330	**0 319 358 243**
714 000 062 331	**0 319 358 244**
714 000 062 366	**0 319 366 443**
714 000 062 367	**0 319 366 444**
714 000 062 405	**0 319 357 245**
714 000 062 406	**0 319 357 243**
714 000 062 407	**0 319 357 244**
714 000 062 414	**0 319 366 445**
714 000 062 415	**0 319 366 446**
714 000 062 454	**0 319 364 243**
714 000 062 455	**0 319 364 244**
714 000 062 460	**0 319 364 043**
714 000 062 461	**0 319 364 044**
714 000 062 500	**0 319 364 343**
714 000 062 501	**0 319 364 344**
714 000 062 504	**0 319 364 143**
714 000 062 505	**0 319 364 144**
714 000 274 801	**0 319 384 103**
714 000 274 802	**0 319 384 104**
714 000 274 901	**0 319 384 105**
714 000 274 902	**0 319 384 106**
714 000 283 202	**0 319 392 205**
714 000 283 212	**0 319 392 206**
714 000 283 302	**0 319 392 203**
714 000 283 312	**0 319 392 204**
714 015 071 701	**0 319 208 203**
714 015 071 801	**0 319 208 204**
714 015 090 701	**0 319 204 203**
714 015 090 801	**0 319 204 204**
714 015 091 701	**0 319 204 243**
714 015 091 801	**0 319 204 244**
714 015 100 701	**0 319 277 203**
714 015 100 801	**0 319 277 204**
714 015 110 701	**0 319 207 203**
714 015 110 801	**0 319 207 204**
714 018 780 701	**0 319 201 403**
714 018 780 801	**0 319 201 404**
714 018 781 701	**0 319 201 443**
714 018 781 801	**0 319 201 444**
714 019 800 701	**0 319 203 203**
714 019 800 801	**0 319 203 204**
714 019 820 701	**0 319 202 203**
714 019 820 801	**0 319 202 204**
714021890702	**0 319 398 703**
714021890802	**0 319 398 704**
714021950702	**0 319 399 703**
714021950802	**0 319 399 704**
714 025 201 701	**0 319 329 413**
714 025 201 801	**0 319 329 414**
714 025 210 701	**0 319 369 403**
714 025 210 801	**0 319 369 404**
714 025 211 701	**0 319 369 443**
714 025 211 801	**0 319 369 444**
714 025 220 701	**0 319 371 203**
714 025 220 801	**0 319 371 204**
714 025 221 701	**0 319 371 243**
714 025 221 801	**0 319 371 244**
714 025 231 701	**0 319 377 243**
714 025 231 801	**0 319 377 244**
714 025 250 703	**0 319 329 103**
714 025 250 803	**0 319 329 104**
714 025 251 701	**0 319 329 403**
714 025 251 801	**0 319 329 404**
714 025 260 701	**0 319 374 205**
714 025 260 761	**0 319 374 203**
714 025 260 801	**0 319 374 206**
714 025 260 861	**0 319 374 204**
714 025 270 701	**0 319 326 203**
714 025 270 703	**0 319 326 213**
714 025 270 761	**0 319 326 205**
714 025 270 763	**0 319 326 215**
714 025 270 801	**0 319 326 204**
714 025 270 803	**0 319 326 214**
714 025 270 861	**0 319 326 206**
714 025 270 863	**0 319 326 216**
714 025 281 701	**0 319 376 243**
714 025 281 801	**0 319 376 244**
714 025 291 701	**0 319 360 243**
714 025 291 801	**0 319 360 244**
714 025 293 701	**0 319 360 273**
714 025 293 801	**0 319 360 274**
714 025 300 701	**0 319 327 403**
714 025 300 711	**0 319 327 405**
714 025 300 801	**0 319 327 404**
714 025 300 811	**0 319 327 406**
714 025 310 703	**0 319 370 203**
714 025 310 803	**0 319 370 204**
714 025 311 701	**0 319 370 243**
714 025 311 801	**0 319 370 244**
714 025 313 701	**0 319 370 273**
714 025 313 801	**0 319 370 274**
714 025 340 701	**0 319 328 203**
714 025 340 801	**0 319 328 204**
714 025 420 701	**0 319 327 203**
714 025 420 801	**0 319 327 204**
714 025 430 703	**0 319 373 203**
714 025 430 803	**0 319 373 204**
714 025 431 701	**0 319 373 205**
714 025 431 801	**0 319 373 206**
714 025 460 702	**0 319 368 201**
714 025 460 704	**0 319 368 203**
714 025 460 706	**0 319 368 205**
714 025 460 708	**0 319 368 211**
714 025 460 710	**0 319 368 213**
714 025 460 712	**0 319 368 215**
714 025 460 802	**0 319 368 212**
714 025 460 804	**0 319 368 214**
714 025 460 806	**0 319 368 216**
714 025 460 808	**0 319 368 202**
714 025 460 810	**0 319 368 204**
714 025 460 812	**0 319 368 206**
714 025 490 701	**0 319 383 105**
714 025 490 703	**0 319 383 103**
714 025 490 801	**0 319 383 106**
714 025 490 803	**0 319 383 104**
714 025 500 701	**0 319 328 213**
714 025 500 801	**0 319 328 214**
714 025 510 701	**0 319 375 203**
714 025 510 801	**0 319 375 204**
714 025 520 701	**0 319 325 203**
714 025 520 801	**0 319 325 204**
714 025 530 701	**0 319 339 103**
714 025 530 801	**0 319 339 104**
714 025 560 701	**0 319 324 103**
714 025 560 801	**0 319 324 104**
714 025 600 701	**0 319 372 703**
714 025 600 761	**0 319 372 705**
714 025 600 801	**0 319 372 704**
714 025 600 861	**0 319 372 706**
714025610704	**0 319 413 203**
714025610804	**0 319 413 204**
714 025 630 701	**0 319 370 305**
714 025 630 703	**0 319 370 303**
714 025 630 801	**0 319 370 306**
714 025 630 803	**0 319 370 304**
714 025 670 702	**0 319 347 113**
714 025 670 704	**0 319 347 103**
714 025 670 802	**0 319 347 114**
714 025 670 804	**0 319 347 104**
714 025 680 702	**0 319 345 003**
714 025 680 704	**0 319 345 103**
714 025 680 802	**0 319 345 004**
714 025 680 804	**0 319 345 104**
714 025 690 702	**0 319 322 213**
714 025 690 704	**0 319 322 203**
714 025 690 802	**0 319 322 214**
714 025 690 804	**0 319 322 204**
714 025 700 702	**0 319 385 103**
714 025 700 802	**0 319 385 104**
714 025 710 702	**0 319 385 203**
714 025 710 802	**0 319 385 204**
714 025 720 701	**0 319 382 203**
714 025 720 801	**0 319 382 204**
714 025 890 702	**0 319 386 103**
714 025 890 704	**0 319 386 105**
714 025 890 802	**0 319 386 104**
714 025 890 804	**0 319 386 106**
714026090702	**0 319 413 303**
714026090802	**0 319 413 304**
714 027 040 701	**0 319 387 203**
714 027 040 704	**0 319 387 205**
714 027 040 801	**0 319 387 206**
714 027 040 804	**0 319 387 204**
714 027 240 101	**0 319 340 105**
714 027 240 103	**0 319 340 115**
714 027 240 201	**0 319 340 116**
714 027 240 203	**0 319 340 106**
714 027 250 101	**0 319 340 103**
714 027 250 201	**0 319 340 104**
714 027 330 702	**0 319 309 203**
714 027 330 704	**0 319 309 213**
714 027 330 802	**0 319 309 204**
714 027 330 804	**0 319 309 214**
714 027 340 702	**0 319 309 205**
714 027 340 704	**0 319 309 215**
714 027 340 802	**0 319 309 206**
714 027 340 804	**0 319 309 216**
714 027 440 701	**0 319 381 703**
714 027 440 803	**0 319 381 704**
714 027 450 702	**0 319 381 705**
714 027 450 802	**0 319 381 706**
714 027 520 711	**0 319 330 203**
714 027 520 713	**0 319 330 213**
714 027 520 811	**0 319 330 204**
714 027 520 813	**0 319 330 214**
714 027 530 701	**0 319 330 205**
714 027 530 703	**0 319 330 215**
714 027 530 801	**0 319 330 206**
714 027 530 803	**0 319 330 216**
714 027 550 101	**0 319 335 103**
714 027 550 201	**0 319 335 104**
714 027 560 701	**0 319 380 703**
714 027 560 803	**0 319 380 704**
714 027 570 711	**0 319 380 705**
714 027 570 811	**0 319 380 706**
714 027 590 104	**0 319 346 103**
714 027 590 204	**0 319 346 104**
714 027 610 701	**0 319 319 103**
714 027 610 801	**0 319 319 104**
714 027 620 701	**0 319 319 113**
714 027 620 801	**0 319 319 114**

◀ MARELLI

714 027 630 701	**0 319 318 203**	714 028 431 705	**0 319 379 143**	714 028 671 701	**0 319 315 143**	714 029 080 801	**0 319 305 204**
714 027 630 801	**0 319 318 204**	714 028 431 803	**0 319 378 244**	714 028 671 703	**0 319 315 243**	714 029 080 803	**0 319 305 214**
714 027 640 701	**0 319 318 213**	714 028 431 807	**0 319 379 144**	714 028 671 801	**0 319 315 144**	714 029 080 811	**0 319 306 204**
714 027 640 801	**0 319 318 214**	714 028 470 701	**0 319 303 203**	714 028 671 803	**0 319 315 244**	714 029 081 701	**0 319 305 243**
714 027 740 701	**0 319 331 203**	714 028 470 703	**0 319 303 213**	714 028 672 701	**0 319 315 173**	714 029 081 702	**0 319 305 253**
714 027 740 801	**0 319 331 204**	714 028 470 801	**0 319 303 204**	714 028 672 703	**0 319 315 273**	714 029 081 711	**0 319 306 243**
714 027 760 701	**0 319 302 213**	714 028 470 803	**0 319 303 214**	714 028 672 801	**0 319 315 174**	714 029 081 712	**0 319 306 245**
714 027 760 801	**0 319 302 214**	714 028 471 701	**0 319 303 243**	714 028 672 803	**0 319 315 274**	714 029 081 801	**0 319 305 244**
714 027 770 701	**0 319 302 203**	714 028 471 702	**0 319 303 253**	714 028 681 701	**0 319 315 253**	714 029 081 802	**0 319 305 254**
714 027 770 801	**0 319 302 204**	714 028 471 801	**0 319 303 244**	714 028 681 801	**0 319 315 254**	714 029 081 811	**0 319 306 244**
714 027 840 102	**0 319 341 205**	714 028 471 802	**0 319 303 254**	714 028 771 701	**0 319 342 243**	714 029 150 725	**0 319 312 203**
714 027 840 414	**0 319 341 206**	714 02 849 070 2	**0 318 348 005**	714 028 771 706	**0 319 342 343**	714 029 150 825	**0 319 312 204**
714 027 850 102	**0 319 341 203**	714 028 490 702	**0 319 349 103**	714 028 771 801	**0 319 342 244**	714 029 150 827	**0 319 312 206**
714 027 850 202	**0 319 341 204**	714 02 849 080 2	**0 318 348 006**	714 028 771 803	**0 319 342 246**	714 029 151 701	**0 319 312 143**
714 027 880 703	**0 319 320 213**	714 028 490 802	**0 319 349 104**	714 028 771 806	**0 319 342 344**	714 029 151 801	**0 319 312 144**
714 027 880 803	**0 319 320 214**	714 02 850 070 2	**0 318 348 015**	714 028 771 808	**0 319 342 346**	714 029 151 805	**0 319 312 146**
714 027 890 703	**0 319 320 203**	714 028 500 702	**0 319 349 105**	714 028 900 701	**0 319 334 103**	714 029 152 701	**0 319 312 173**
714 027 890 803	**0 319 320 204**	714 02 850 070 4	**0 318 348 025**	714 028 900 703	**0 319 334 113**	714 029 152 801	**0 319 312 174**
714 027 950 114	**0 319 341 113**	714 028 500 704	**0 319 349 115**	714 028 900 801	**0 319 334 104**	714 029 270 707	**0 319 313 203**
714 027 950 212	**0 319 341 114**	714 02 850 080 2	**0 318 348 026**	714 028 900 803	**0 319 334 114**	714 029 270 807	**0 319 313 204**
714 027 950 414	**0 319 341 104**	714 028 500 802	**0 319 349 116**	714 028 901 701	**0 319 334 143**	714 029 271 701	**0 319 313 143**
714 027 950 512	**0 319 341 103**	714 02 850 080 4	**0 318 348 016**	714 028 901 801	**0 319 334 144**	714 029 271 703	**0 319 313 153**
714 028 040 701	**0 319 304 203**	714 028 500 804	**0 319 349 106**	714 028 940 701	**0 319 333 203**	714 029 271 801	**0 319 313 144**
714 028 040 703	**0 319 304 213**	714 028 570 731	**0 319 316 103**	714 028 940 801	**0 319 333 204**	714 029 271 803	**0 319 313 154**
714 028 040 801	**0 319 304 214**	714 028 570 735	**0 319 316 203**	714 028 941 701	**0 319 333 243**	714 029 272 702	**0 319 313 173**
714 028 040 803	**0 319 304 204**	714 028 570 833	**0 319 316 104**	714 028 941 801	**0 319 333 244**	714 029 272 802	**0 319 313 174**
714 028 150 701	**0 319 338 213**	714 028 570 837	**0 319 316 204**	714 029 051 701	**0 319 342 143**	714 029 280 701	**0 319 308 213**
714 028 150 801	**0 319 338 214**	714 028 571 731	**0 319 316 143**	714 029 051 731	**0 319 342 043**	714 029 280 803	**0 319 308 214**
714 028 180 701	**0 319 338 205**	714 028 571 735	**0 319 316 243**	714 029 051 801	**0 319 342 144**	714 029 281 701	**0 319 308 253**
714 028 180 801	**0 319 338 206**	714 028 571 833	**0 319 316 144**	714 029 051 802	**0 319 342 146**	714 029 281 802	**0 319 308 254**
714 028 190 701	**0 319 338 203**	714 028 571 837	**0 319 316 244**	714 029 051 831	**0 319 342 044**	714 029 290 701	**0 319 308 203**
714 028 190 801	**0 319 338 204**	714 028 620 124	**0 319 336 213**	714 029 051 832	**0 319 342 046**	714 029 290 801	**0 319 308 204**
714 028 250 701	**0 319 350 103**	714 028 620 222	**0 319 336 214**	714 029 060 701	**0 319 352 153**	714 029 291 701	**0 319 308 243**
714 028 250 801	**0 319 350 104**	714 028 620 701	**0 319 336 113**	714 029 060 707	**0 319 352 253**	714 029 291 801	**0 319 308 244**
714 028 260 701	**0 319 350 105**	714 028 620 703	**0 319 336 103**	714 029 060 709	**0 319 352 343**	714 029 501 701	**0 319 310 243**
714 028 260 703	**0 319 350 115**	714 028 620 721	**0 319 337 213**	714 029 060 801	**0 319 352 154**	714 029 501 803	**0 319 310 244**
714 028 260 801	**0 319 350 116**	714 028 620 723	**0 319 337 203**	714 029 060 807	**0 319 352 254**	714 029 511 701	**0 319 310 253**
714 028 260 803	**0 319 350 106**	714 028 620 801	**0 319 336 104**	714 029 060 809	**0 319 352 354**	714 029 511 801	**0 319 310 254**
714 028 330 701	**0 319 317 203**	714 028 620 803	**0 319 336 114**	714 029 061 701	**0 319 352 143**	714 029 540 713	**0 319 314 213**
714 028 330 803	**0 319 317 204**	714 028 620 821	**0 319 337 204**	714 029 061 707	**0 319 352 243**	714 029 540 728	**0 319 314 203**
714 028 331 701	**0 319 317 243**	714 028 620 823	**0 319 337 214**	714 029 061 709	**0 319 352 353**	714 029 540 813	**0 319 314 214**
714 028 331 802	**0 319 317 244**	714 028 621 703	**0 319 336 143**	714 029 061 801	**0 319 352 144**	714 029 540 828	**0 319 314 204**
714 028 370 701	**0 319 307 203**	714 028 621 801	**0 319 336 144**	714 029 061 807	**0 319 352 244**	714 029 541 701	**0 319 314 153**
714 028 370 803	**0 319 307 204**	714 028 630 701	**0 319 336 233**	714 029 061 809	**0 319 352 344**	714 029 541 704	**0 319 314 143**
714 028 390 701	**0 319 333 213**	714 028 630 703	**0 319 336 203**	714 029 070 701	**0 319 301 203**	714 029 541 801	**0 319 314 154**
714 028 390 801	**0 319 333 214**	714 028 630 733	**0 319 336 223**	714 029 070 703	**0 319 301 213**	714 029 541 804	**0 319 314 144**
714 028 400 701	**0 319 353 203**	714 028 630 746	**0 319 336 403**	714 029 070 801	**0 319 301 204**	714 029 651 701	**0 319 311 143**
714 028 400 801	**0 319 353 204**	714 028 630 748	**0 319 336 413**	714 029 070 803	**0 319 301 214**	714 029 651 801	**0 319 311 144**
714 028 401 701	**0 319 353 243**	714 028 630 801	**0 319 336 204**	714 029 071 701	**0 319 301 243**	714 029 651 803	**0 319 311 146**
714 028 401 801	**0 319 353 244**	714 028 630 803	**0 319 336 234**	714 029 071 702	**0 319 301 253**	714 033 090 601	**0 319 604 119**
714 028 430 701	**0 319 378 203**	714 028 630 831	**0 319 336 224**	714 029 071 801	**0 319 301 244**	714 034 830 713	**0 319 603 123**
714 028 430 705	**0 319 379 103**	714 028 630 846	**0 319 336 414**	714 029 071 802	**0 319 301 254**	714 034 830 813	**0 319 603 124**
714 028 430 803	**0 319 378 204**	714 028 630 848	**0 319 336 404**	714 029 080 701	**0 319 305 203**	714 034 831 701	**0 319 603 143**
714 028 430 807	**0 319 379 104**	714 028 631 703	**0 319 336 243**	714 029 080 703	**0 319 305 213**	714 034 831 801	**0 319 603 144**
714 028 431 701	**0 319 378 243**	714 028 631 801	**0 319 336 244**	714 029 080 711	**0 319 306 203**	714 034 890 701	**0 319 601 113**

714 034 890 711	**0 319 602 113**
714 034 890 717	**0 319 602 123**
714 034 890 801	**0 319 601 114**
714 034 890 811	**0 319 602 114**
714 034 890 817	**0 319 602 124**
714 098 190 083	**0 319 223 103**
714 098 190 084	**0 319 223 104**
714 098 190 285	**0 319 205 203**
714 098 190 286	**0 319 205 204**
714 098 290 027	**0 319 323 143**
714 098 290 028	**0 319 323 144**
714 098 290 161	**0 319 344 173**
714 098 290 162	**0 319 344 174**
714 098 290 163	**0 319 344 143**
714 098 290 164	**0 319 344 146**
714 098 290 167	**0 319 354 103**
714 098 290 168	**0 319 354 104**
714 098 290 169	**0 319 354 105**
714 098 290 170	**0 319 354 106**
714 098 290 172	**0 319 344 144**
714 098 290 178	**0 319 346 248**
714 098 290 179	**0 319 356 245**
714 098 290 180	**0 319 356 244**
714 098 290 181	**0 319 356 243**
714 098 290 183	**0 319 356 273**
714 098 290 186	**0 319 356 246**
714 098 290 205	**0 319 332 103**
714 098 290 207	**0 319 332 143**
714 098 290 210	**0 319 332 104**
714 098 290 212	**0 319 332 144**
714 098 290 213	**0 319 321 113**
714 098 290 214	**0 319 321 114**
714 098 290 217	**0 319 321 103**
714 098 290 218	**0 319 321 104**
714 098 290 231	**0 319 332 203**
714 098 290 232	**0 319 332 204**
714 098 290 356	**0 319 359 104**
714 098 290 357	**0 319 359 103**
714 098 290 381	**0 319 358 143**
714 098 290 382	**0 319 358 146**
714 098 290 383	**0 319 358 173**
714 098 290 384	**0 319 358 144**
714 098 290 386	**0 319 358 174**
714 098 290 436	**0 319 355 106**
714 098 290 437	**0 319 355 105**
714 098 290 439	**0 319 355 103**
714 098 290 440	**0 319 355 104**
714 098 290 441	**0 319 356 343**
714 098 290 442	**0 319 356 344**
714 098 290 443	**0 319 356 345**
714 098 290 444	**0 319 356 346**
714 098 290 448	**0 319 367 244**
714 098 290 449	**0 319 367 243**
714 098 290 450	**0 319 367 246**
714 098 290 451	**0 319 367 245**
714 098 290 452	**0 319 367 274**
714 098 290 453	**0 319 367 273**
714 098 290 462	**0 319 359 144**
714 098 290 463	**0 319 359 143**
714 098 290 479	**0 319 365 173**
714 098 290 480	**0 319 365 174**
714 098 290 481	**0 319 365 443**
714 098 290 482	**0 319 365 444**
714 098 290 485	**0 319 365 143**
714 098 290 486	**0 319 365 144**
714 098 290 491	**0 319 357 145**
714 098 290 492	**0 319 357 144**
714 098 290 493	**0 319 357 143**
714 098 290 494	**0 319 357 344**
714 098 290 495	**0 319 357 343**
714 098 290 496	**0 319 357 174**
714 098 290 497	**0 319 357 173**
714 098 290 498	**0 319 357 374**
714 098 290 499	**0 319 357 373**
714 098 290 503	**0 319 362 243**
714 098 290 504	**0 319 362 244**
714 098 290 505	**0 319 362 273**
714 098 290 506	**0 319 362 274**
714 098 290 507	**0 319 343 103**
714 098 290 508	**0 319 343 106**
714 098 290 510	**0 319 343 104**
714 098 290 515	**0 319 366 143**
714 098 290 516	**0 319 366 144**
714 098 290 517	**0 319 366 173**
714 098 290 518	**0 319 366 174**
714 098 290 519	**0 319 366 145**
714 098 290 520	**0 319 366 146**

MERCEDES-BENZ

000 074 05 80	**1 411 015 053**
000 074 19 59	**2 916 710 610**
000 098 05 65	**2 916 710 602**
000 154 10 80	**1 121 015 015**
000 154 11 80	**1 121 015 011**
000 154 40 80	**1 121 015 015**
000 158 00 80	**1 231 015 002**
000 431 00 84	**2 916 710 505**
000 540 00 63	**0 305 059 001**
000 540 01 63	**0 305 059 002**
000 544 04 07	**0 307 100 006**
000 544 04 18	**1 305 303 080**
000 544 09 89	**1 305 504 133**
000 544 15 92	**1 305 305 020**
000 544 25 92	**1 305 303 041**
000 544 28 90	**1 305 601 080**
000 544 30 07	**0 314 102 004**
000 544 49 01	**0 300 682 001**
000 544 63 89	**1 305 503 900**
000 544 74 80	**2 301 014 111**
000 544 78 92	**1 305 311 062**
000 544 81 01	**0 302 601 001**
000 545 04 39	**1 928 300 182**
000 545 05 39	**1 928 300 198**
000 545 09 39	**1 928 300 191**
000 545 24 39	**1 928 300 246**
000 545 31 80	**1 928 300 191**
000 545 49 80	**1 928 300 198**
000 545 50 80	**1 928 300 219**
000 545 64 80	**1 928 300 439**
000 800 04 73	**0 307 650 100**
000 800 08 73	**0 307 650 101**
000 800 30 75	**0 307 650 001**
000 800 51 75	**0 307 650 002**
000 800 97 75	**0 307 650 002**
000 800 97 75	**0 307 650 006**
000 820 00 08	**0 307 852 328**
000 820 02 21	**1 305 233 051**
000 820 02 66	**1 305 620 955**
000 820 03 21	**1 305 233 052**
000 820 03 66	**1 305 620 956**
000 820 04 66	**1 305 620 951**
000 820 05 66	**1 305 620 952**
000 820 06 66	**1 305 620 953**
000 820 07 61	**0 301 021 303**
000 820 07 66	**1 305 620 954**
000 820 08 61	**0 301 021 304**
000 820 10 66	**1 305 621 931**
000 820 11 66	**1 305 621 932**
000 820 14 61	**0 300 804 013**
000 820 19 61	**0 301 501 502**
000 820 20 21	**1 305 233 062**
000 820 21 21	**1 305 233 061**
000 820 22 21	**1 305 233 082**
000 820 23 56	**0 313 101 004**
000 820 39 61	**0 313 101 005**
000 820 42 56	**0 305 451 007**
000 820 47 56	**0 305 450 009**
000 820 48 56	**0 305 450 010**
000 820 49 61	**0 301 501 503**
000 820 54 21	**1 305 232 034**
000 820 54 21	**1 305 232 035**
000 820 55 21	**1 305 232 034**
000 820 55 21	**1 305 232 035**
000 820 65 56	**0 305 450 043**
000 820 66 21	**1 305 232 046**
000 820 66 56	**0 305 450 044**
000 820 67 21	**1 305 232 047**
000 820 67 56	**0 305 400 001**
000 820 68 21	**1 305 233 106**
000 820 68 21	**1 305 233 928**
000 820 68 56	**0 305 400 001**
000 820 68 56	**0 305 403 001**
000 820 69 21	**1 305 233 107**
000 820 69 21	**1 305 233 929**
000 820 73 21	**1 305 233 916**
000 820 74 21	**1 305 233 917**
000 820 74 61	**0 301 021 401**
000 820 75 61	**0 301 021 402**
000 820 84 21	**1 305 233 082**
000 820 84 21	**1 305 233 925**
000 820 84 61	**0 301 603 001**
000 820 85 21	**1 305 233 081**
000 820 85 21	**1 305 233 924**
000 820 85 56	**0 305 650 004**
000 820 88 21	**1 305 233 918**
000 820 89 21	**1 305 233 919**
000 820 90 21	**1 305 233 920**
000 820 91 21	**1 305 233 921**
000 820 92 21	**1 305 233 922**
000 820 93 21	**1 305 233 923**
000 820 94 21	**1 305 233 926**
000 820 95 21	**1 305 233 927**
000 820 98 21	**1 305 232 911**
000 820 99 21	**1 305 232 912**
000 826 01 78	**1 305 314 109**
000 826 01 80	**1 300 212 011**
000 826 03 38	**0 307 853 309**
000 826 03 57	**1 305 620 035**
000 826 03 78	**1 305 314 133**
000 826 06 56	**1 305 621 230**
000 826 09 80	**1 300 212 013**
000 826 11 57	**1 305 620 301**
000 826 12 78	**1 305 320 927**
000 826 13 24	**1 305 542 093**
000 826 13 78	**1 305 311 040**
000 826 14 24	**1 305 542 094**
000 826 14 78	**1 305 314 999**
000 826 14 81	**1 305 314 131**
000 826 15 78	**1 305 314 998**
000 826 17 57	**1 305 620 917**
000 826 17 78	**1 305 314 910**
000 826 18 57	**1 305 620 918**
000 826 18 78	**1 305 320 928**
000 826 19 57	**1 305 620 913**
000 826 19 58	**1 301 015 151**
000 826 19 78	**1 305 320 929**
000 826 19 81	**1 305 314 115**
000 826 20 24	**1 305 542 100**
000 826 20 57	**1 305 620 914**
000 826 20 80	**1 300 212 012**
000 826 20 99	**1 305 303 908**
000 826 29 99	**0 301 303 016**
000 826 31 80	**1 301 015 040**
000 826 31 99	**0 301 303 550**
000 826 32 90	**1 305 604 070**
000 826 32 99	**0 301 303 018**
000 826 35 78	**1 305 320 999**

000 826 36 81	**1 305 314 136**
000 826 38 78	**1 305 314 918**
000 826 39 78	**1 305 314 919**
000 826 39 81	**1 305 314 127**
000 826 40 78	**1 305 314 917**
000 826 40 81	**1 305 314 126**
000 826 40 89	**1 305 504 904**
000 826 42 99	**1 305 333 026**
000 826 45 78	**1 305 320 201**
000 826 47 81	**1 305 314 128**
000 826 52 81	**1 305 314 035**
000 826 53 90	**1 305 630 011**
000 826 53 99	**1 305 303 961**
000 826 54 78	**1 305 314 923**
000 826 57 80	**2 301 014 115**
000 826 57 90	**1 305 601 120**
000 826 58 80	**1 301 015 028**
000 826 58 81	**1 305 320 910**
000 826 60 90	**1 305 604 089**
000 826 61 90	**1 305 604 087**
000 826 63 78	**1 305 320 988**
000 826 64 78	**1 305 320 989**
000 826 64 90	**1 305 604 092**
000 826 65 90	**1 305 604 091**
000 826 66 80	**1 300 212 010**
000 826 67 90	**1 305 603 119**
000 826 68 90	**1 305 604 020**
000 826 68 99	**1 305 303 103**
000 826 69 80	**1 301 015 004**
000 826 69 81	**1 305 320 902**
000 826 71 80	**1 300 212 017**
000 826 77 80	**1 301 015 079**
000 826 78 90	**1 305 620 046**
000 826 79 80	**1 301 015 077**
000 826 79 90	**1 305 620 047**
000 826 80 80	**1 301 015 078**
000 826 82 80	**1 301 015 075**
000 826 83 80	**1 301 015 076**
000 826 84 80	**1 311 015 015**
000 826 85 78	**1 305 314 931**
000 826 86 78	**1 305 314 932**
000 826 86 80	**1 301 015 067**
000 826 86 81	**2 305 320 918**
000 826 87 89	**1 305 503 915**
000 826 88 81	**2 305 320 920**
000 826 88 90	**1 305 620 060**
000 826 90 78	**1 305 301 920**
000 826 90 80	**1 301 015 033**
000 826 91 78	**1 305 320 832**
000 826 91 80	**1 301 015 034**
000 826 92 78	**1 305 320 833**
000 826 93 78	**1 305 320 834**
000 826 94 80	**1 301 015 019**
000 826 95 78	**1 305 320 836**
000 826 96 78	**1 305 320 837**
000 826 99 78	**1 305 354 922**
000 826 99 90	**1 305 630 050**
000 997 00 40	**2 440 109 005**
001 074 16 80	**1 411 015 097**
001 544 02 01	**0 301 608 519**
001 544 03 01	**0 301 608 611**
001 544 03 90	**1 315 610 342**
001 544 65 90	**1 315 620 960**
001 544 69 03	**0 311 425 001**
001 544 86 90	**1 305 543 911**
001 545 76 80	**1 928 300 283**
001 820 00 21	**1 305 232 913**
001 820 01 21	**1 305 232 914**
001 820 07 61	**0 301 021 303**
001 820 08 61	**0 301 021 304**
001 820 25 61	**0 301 021 701**
001 820 26 61	**0 301 021 702**
001 820 42 61	**0 301 021 703**
001 820 43 61	**0 301 021 704**
001 820 47 61	**0 301 063 602**
001 820 47 61	**0 301 603 601**
001 820 47 61	**0 301 603 602**
001 820 48 61	**0 301 603 601**
001 820 48 61	**0 301 603 602**
001 820 50 56	**0 305 403 001**
001 820 50 61	**0 301 603 004**
001 820 80 56	**0 314 106 001**
001 820 97 61	**1 307 022 907**
001 820 98 61	**1 307 022 908**
001 820 99 61	**1 307 022 909**
001 822 96 10	**1 315 630 085**
001 822 97 10	**1 315 630 086**
001 826 01 90	**1 305 630 050**
001 826 02 80	**2 301 014 107**
001 826 08 78	**1 305 320 861**
001 826 08 81	**1 305 365 900**
001 826 08 99	**1 305 333 908**
001 826 09 78	**1 305 320 862**
001 826 09 80	**1 301 015 122**
001 826 09 99	**1 305 333 907**
001 826 10 80	**1 301 015 121**
001 826 10 90	**1 305 615 002**
001 826 11 89	**1 305 540 902**
001 826 12 78	**1 305 320 869**
001 826 12 80	**1 301 014 050**
001 826 13 78	**1 305 320 870**
001 826 14 78	**1 305 320 871**
001 826 14 89	**1 305 504 927**
001 826 15 78	**1 305 320 872**
001 826 15 80	**1 301 015 126**
001 826 15 81	**1 305 300 028**
001 826 16 78	**1 305 320 878**
001 826 16 80	**1 301 015 127**
001 826 17 78	**1 305 320 879**
001 826 17 80	**1 301 016 013**
001 826 18 78	**1 305 320 880**
001 826 18 80	**1 301 016 014**
001 826 19 78	**1 305 320 881**
001 826 19 80	**1 301 014 052**
001 826 20 80	**1 301 014 053**
001 826 21 89	**1 305 504 115**
001 826 22 81	**1 305 320 406**
001 826 23 81	**1 305 320 407**
001 826 23 89	**1 305 503 061**
001 826 24 89	**1 305 503 904**
001 826 25 80	**2 301 014 126**
001 826 26 80	**1 301 014 217**
001 826 29 80	**1 301 014 300**
001 826 30 78	**1 305 320 874**
001 826 31 78	**1 305 320 873**
001 826 31 90	**1 305 604 060**
001 826 32 78	**1 305 314 936**
001 826 33 78	**1 305 314 935**
001 826 34 80	**1 301 014 070**
001 826 35 78	**1 305 363 963**
001 826 36 80	**1 301 014 071**
001 826 37 78	**1 305 363 965**
001 826 40 89	**1 305 504 036**
001 826 44 80	**1 301 014 088**
001 826 45 90	**2 305 600 301**
001 826 46 78	**1 305 365 909**
001 826 47 78	**1 305 365 911**
001 826 48 90	**3 305 603 003**
001 826 50 78	**1 305 363 929**
001 826 50 90	**1 305 630 068**
001 826 51 90	**1 305 630 064**
001 826 52 78	**1 305 363 931**
001 826 52 90	**1 305 630 067**
001 826 54 78	**1 305 363 938**
001 826 54 89	**1 305 540 932**
001 826 55 78	**1 305 363 939**
001 826 55 80	**1 301 014 339**
001 826 56 78	**1 305 363 940**
001 826 58 78	**1 305 320 894**
001 826 61 90	**1 305 620 113**
001 826 62 90	**1 305 620 114**
001 826 65 90	**1 315 620 958**
001 826 66 90	**1 315 620 959**
001 826 67 90	**1 305 620 123**
001 826 68 78	**1 305 354 922**
001 826 68 90	**1 305 620 124**
001 826 69 90	**1 305 620 016**
001 826 71 90	**2 305 620 011**
001 826 74 78	**1 305 363 958**
001 826 75 78	**1 305 363 959**
001 826 76 78	**1 305 363 960**
001 826 78 78	**1 305 362 901**
001 826 79 78	**1 305 362 902**
001 826 79 90	**1 305 620 909**
001 826 80 78	**1 305 362 903**
001 826 80 90	**1 305 620 910**
001 826 81 90	**1 305 620 911**
001 826 82 90	**1 305 620 912**
001 826 83 90	**1 305 620 145**
001 826 89 78	**1 305 320 898**
001 826 90 78	**1 305 320 899**
001 826 90 90	**1 305 620 039**
001 826 91 78	**1 305 354 920**
001 826 91 90	**1 305 630 018**
001 826 92 78	**1 305 320 723**
001 826 92 90	**1 305 630 068**
001 826 93 78	**1 305 320 724**
001 826 94 78	**1 305 320 725**
001 826 97 78	**1 305 310 900**
001 926 36 78	**1 305 363 964**
001 997 30 40	**1 410 206 020**
002 820 00 61	**1 307 022 910**
002 820 03 61	**1 307 022 913**
002 820 04 61	**1 307 022 914**
002 820 05 61	**1 307 022 915**
002 820 06 61	**1 307 022 916**
002 820 07 61	**1 307 022 917**
002 820 08 61	**1 307 022 918**
002 820 15 61	**1 307 022 915**
002 820 16 61	**1 307 022 916**
002 820 45 56	**0 306 604 001**
002 820 45 56	**0 306 604 011**
002 820 52 56	**0 306 604 012**
002 820 58 56	**0 305 601 011**
002 820 59 56	**0 305 601 012**
002 826 00 78	**1 305 300 098**
002 826 01 78	**1 305 320 816**
002 826 06 78	**1 305 354 951**
002 826 07 78	**1 305 354 950**
002 826 08 78	**1 305 321 867**
002 826 08 90	**2 305 620 900**
002 826 09 78	**1 305 321 868**
002 826 09 90	**2 305 620 901**
002 826 10 78	**1 305 321 869**
002 826 11 78	**1 305 321 870**
002 826 12 78	**1 305 321 871**
002 826 12 90	**2 305 620 904**
002 826 13 78	**1 305 321 872**
002 826 13 90	**2 305 620 905**
002 826 19 90	**2 305 610 301**
002 826 28 90	**1 305 620 934**
002 826 29 90	**1 305 620 935**
002 826 30 90	**1 305 320 804**
002 826 39 90	**1 305 620 321**
002 826 43 90	**1 305 620 322**
002 826 53 90	**1 305 620 454**
002 826 54 90	**1 305 620 453**
002 826 55 90	**1 305 620 452**
002 826 66 90	**1 305 620 272**
002 826 67 90	**1 305 620 273**

002 826 68 90	**1 305 620 268**
002 826 69 90	**1 305 620 269**
002 826 70 90	**1 305 620 270**
002 826 71 90	**1 305 620 271**
002 826 74 90	**1 305 620 481**
002 826 75 90	**1 305 620 482**
002 826 76 90	**1 305 620 483**
002 826 77 90	**1 305 620 484**
002 826 80 90	**1 305 620 491**
002 826 81 90	**1 305 620 492**
002 826 84 90	**1 305 620 977**
002 826 84 90	**1 305 620 982**
002 826 85 90	**1 305 620 978**
002 826 85 90	**1 305 620 983**
002 826 86 90	**1 305 620 979**
002 826 87 90	**1 305 620 980**
002 826 94 90	**1 305 620 550**
002 826 95 90	**1 305 620 549**
002 997 17 40	**1 410 206 023**
002 997 64 40	**2 916 710 619**
002 997 66 40	**2 916 710 613**
003 820 22 90	**1 305 320 491**
003 825 05 90	**1 305 621 908**
003 825 06 90	**1 305 621 909**
003 826 05 90	**1 305 621 904**
003 826 05 90	**1 305 621 908**
003 826 06 90	**1 305 621 905**
003 826 06 90	**1 305 621 909**
003 826 07 90	**1 305 621 906**
003 826 08 90	**1 305 621 907**
003 826 09 90	**1 305 621 063**
003 826 10 90	**1 305 621 065**
003 826 15 90	**1 305 620 589**
003 826 16 90	**1 305 620 590**
003 826 17 90	**1 305 620 591**
003 826 18 90	**1 305 620 592**
003 826 24 90	**1 305 320 526**
003 826 25 90	**1 305 320 527**
003 826 26 90	**1 305 320 533**
003 826 27 90	**1 305 320 534**
003 826 30 90	**1 305 320 579**
003 826 31 90	**1 305 320 580**
003 826 35 90	**1 305 621 247**
003 826 36 90	**1 305 621 248**
003 826 65 90	**1 305 621 230**
003 826 87 90	**1 305 621 994**
003 826 89 90	**1 305 621 993**
003 826 90 90	**1 305 621 997**
003 826 91 90	**1 305 621 998**
003 997 59 46	**1 410 281 012**
004 826 25 90	**1 305 623 324**
004 826 26 90	**1 305 623 325**
004 997 51 40	**1 928 300 198**
004 997 78 40	**2 430 100 789**
007 603 00 61 06	**2 916 710 602**
008 997 10 47	**2 916 730 059**
009 997 11 47	**2 410 283 010**
010 997 50 45	**3 130 210 005**
011 997 05 48	**1 230 251 010**
011 997 06 48	**1 230 251 011**
011 997 71 48	**2 430 206 009**
014 997 34 48	**2 430 206 011**
016 997 81 48	**2 430 206 010**
100 826 00 78	**1 305 314 905**
100 826 00 89	**1 305 540 016**
100 826 00 90	**1 305 630 014**
100 826 01 90	**1 305 630 015**
108 820 00 20	**0 311 508 001**
108 826 01 89	**1 305 542 042**
108 826 01 90	**1 305 630 022**
108 826 02 90	**1 305 630 023**
108 826 03 89	**1 305 542 040**
108 826 03 90	**1 305 630 054**
108 826 04 90	**1 305 630 055**
108 826 05 90	**1 305 630 063**
108 826 07 90	**1 305 630 016**
108 826 08 90	**1 305 630 017**
110 820 01 89	**1 305 504 263**
110 820 21 61	**0 302 600 014**
111 826 00 89	**1 305 542 031**
111 826 03 89	**1 305 501 130**
111 826 03 90	**1 305 320 101**
111 826 04 89	**1 305 542 042**
111 826 05 90	**1 305 630 045**
113 820 00 66	**1 305 542 050**
113 820 01 66	**1 305 542 059**
113 820 02 66	**1 305 542 063**
113 826 01 89	**1 305 542 037**
113 826 02 90	**1 305 630 005**
113 826 03 90	**1 305 630 006**
113 826 04 89	**1 305 542 039**
113 826 05 89	**1 305 542 046**
113 826 06 89	**1 305 542 900**
115 820 06 61	**1 305 541 044**
115 826 04 89	**1 305 542 062**
115 826 05 89	**1 305 542 901**
116 820 27 61	**0 301 056 003**
116 826 03 89	**1 305 542 025**
116 826 04 89	**1 305 542 026**
120 820 04 61	**0 301 807 002**
120 826 01 89	**1 305 504 133**
120 826 02 89	**1 305 504 133**
121 826 00 90	**1 305 604 100**
121 826 01 90	**1 305 604 110**
123 826 02 80	**2 301 014 126**
123 826 03 03	**1 305 542 073**
123 826 03 90	**1 305 620 206**
123 826 04 03	**1 305 542 074**
123 826 04 90	**1 305 620 207**
123 826 06 03	**1 305 542 082**
123 826 07 90	**1 305 620 200**
123 826 08 90	**1 305 620 201**
123 826 09 90	**1 305 620 202**
123 826 10 90	**1 305 620 203**
123 826 15 90	**1 305 620 204**
123 826 16 90	**1 305 620 205**
124 800 00 73	**0 307 650 102**
124 820 00 28	**1 305 321 205**
124 820 00 61	**1 305 233 106**
124 820 01 61	**1 305 233 107**
124 820 09 21	**1 305 233 106**
124 820 10 21	**1 305 233 107**
124 820 15 21	**1 305 233 148**
124 820 16 21	**1 305 233 149**
124 820 33 59	**1 307 022 192**
124 820 34 59	**1 307 022 193**
124 820 47 66	**1 305 621 987**
124 820 48 66	**1 305 621 988**
124 820 49 61	**1 307 022 111**
124 820 50 61	**1 307 022 112**
124 820 53 12	**1 305 540 212**
124 820 54 12	**1 305 540 213**
124 820 57 61	**1 307 022 113**
124 820 58 61	**1 307 022 114**
124 820 63 66	**1 305 621 810**
124 820 87 59	**0 301 073 713**
124 826 00 43	**1 305 233 928**
124 826 01 43	**1 305 233 929**
124 826 03 43	**1 305 233 931**
124 826 07 43	**1 305 233 148**
124 826 07 43	**1 305 233 936**
124 826 08 43	**1 305 233 149**
124 826 08 43	**1 305 233 937**
126 820 05 56	**0 305 404 001**
126 820 06 56	**0 305 404 002**
126 820 19 59	**1 307 022 139**
126 820 20 59	**1 307 022 140**
129 589 00 91	**2 916 710 517**
129 820 01 21	**1 305 231 910**
129 820 01 56	**0 305 120 001**
129 820 02 21	**1 305 231 911**
129 820 02 56	**0 305 120 002**
129 820 02 78	**1 305 321 921**
129 820 03 21	**1 305 231 049**
129 820 03 21	**1 305 231 912**
129 820 03 56	**0 305 120 003**
129 820 03 78	**1 305 321 922**
129 820 04 21	**1 305 231 050**
129 820 04 21	**1 305 231 913**
129 820 04 78	**1 305 321 923**
129 820 11 56	**0 305 051 001**
129 820 11 66	**1 305 321 093**
129 820 12 56	**0 305 051 002**
129 820 12 66	**1 305 321 094**
129 820 13 66	**1 305 621 409**
129 820 14 66	**1 305 621 410**
129 820 15 09	**1 305 321 855**
129 820 15 66	**1 305 621 411**
129 820 16 09	**1 305 321 856**
129 820 16 66	**1 305 621 412**
129 820 18 61	**0 301 081 504**
129 820 25 66	**1 305 621 828**
129 820 26 66	**1 305 621 829**
129 820 29 61	**1 307 022 210**
129 820 30 61	**1 307 022 211**
129 820 33 61	**1 307 022 212**
129 820 34 61	**1 307 022 213**
129 820 35 61	**1 307 022 214**
129 820 36 61	**1 307 022 215**
129 826 00 43	**1 305 231 910**
129 826 01 43	**1 305 231 911**
129 826 01 90	**1 305 621 696**
129 826 02 43	**1 305 231 912**
129 826 02 78	**1 305 321 921**
129 826 02 90	**1 305 621 697**
129 826 03 43	**1 305 231 913**
129 826 03 78	**1 305 321 922**
129 826 03 90	**1 305 621 411**
129 826 04 59	**1 305 540 187**
129 826 04 78	**1 305 321 923**
129 826 04 90	**1 305 621 412**
129 826 05 43	**1 315 106 914**
129 826 06 43	**1 315 106 915**
129 826 07 43	**1 315 106 912**
129 826 08 43	**1 315 106 913**
129 826 08 78	**1 305 321 921**
129 826 09 43	**1 315 106 916**
129 826 09 78	**1 305 321 922**
129 826 10 43	**1 315 106 917**
129 826 10 78	**1 305 321 923**
140 820 01 21	**1 305 233 932**
140 820 01 28	**1 305 321 955**
140 820 02 21	**1 305 233 933**
140 820 03 21	**1 305 233 934**
140 820 05 28	**1 305 321 951**
140 820 06 28	**1 305 321 952**
140 820 15 28	**1 305 321 986**
140 820 16 28	**1 305 321 987**
140 820 17 66	**1 305 621 955**
140 820 18 66	**1 305 621 956**
140 820 19 08	**0 307 860 001**
140 820 19 66	**1 305 621 957**
140 820 20 66	**1 305 621 958**
140 820 23 28	**1 305 232 917**
140 820 29 28	**1 305 321 818**
140 820 30 28	**1 305 321 819**
140 820 32 28	**1 305 321 821**
140 820 39 28	**1 305 321 835**
140 820 47 66	**1 305 621 812**
140 820 48 66	**1 305 621 813**

140 820 49 66	**1 305 621 814**
140 820 50 66	**1 305 621 815**
140 820 74 26	**0 307 870 001**
140 820 88 26	**1 307 329 023**
140 826 01 43	**1 305 233 932**
140 826 01 90	**1 305 621 633**
140 826 02 43	**1 305 233 933**
140 826 02 90	**1 305 621 634**
140 826 03 43	**1 305 233 934**
140 826 03 90	**1 305 621 635**
140 826 04 43	**1 305 233 935**
140 826 04 90	**1 305 621 636**
140 826 05 43	**1 305 233 938**
140 826 06 43	**1 305 233 939**
140 826 07 43	**1 305 233 940**
140 826 07 80	**1 301 014 096**
140 826 07 80	**1 301 014 098**
140 826 07 90	**1 305 621 647**
140 826 08 43	**1 305 233 941**
140 826 08 90	**1 305 621 648**
140 826 09 80	**1 301 016 037**
140 826 10 80	**1 301 016 038**
140 826 11 80	**1 301 014 040**
140 826 11 90	**1 305 621 692**
140 826 12 80	**1 301 014 314**
140 826 12 90	**1 305 621 693**
140 826 15 77	**1 305 542 151**
140 826 17 80	**1 301 016 049**
140 826 18 80	**1 301 016 050**
140 826 41 66	**1 305 621 633**
140 826 42 66	**1 305 621 634**
140 826 43 66	**1 305 621 635**
140 826 44 66	**1 305 621 636**
140 826 45 66	**1 305 621 637**
140 826 46 66	**1 305 621 638**
141 826 07 80	**1 301 014 096**
163 820 06 56	**0 305 055 008**
168 820 19 61	**0 301 192 601**
168 820 20 61	**0 301 192 602**
168 826 01 91	**1 301 015 200**
168 826 03 90	**1 305 615 305**
168 826 04 90	**1 305 615 307**
169 820 11 64	**0 319 330 205**
169 820 12 64	**0 319 330 206**
169 820 15 56	**0 305 077 001**
169 820 15 64	**0 319 330 215**
169 820 16 56	**0 305 077 002**
169 820 16 64	**0 319 330 216**
169 820 21 64	**0 319 330 203**
169 820 22 64	**0 319 330 204**
169 820 25 64	**0 319 330 213**
169 820 26 64	**0 319 330 214**
170 820 10 66	**1 305 620 995**
170 826 01 90	**1 305 621 737**
170 826 02 80	**1 301 014 296**
170 826 02 90	**1 305 621 738**
170 826 03 90	**1 305 621 739**
170 826 04 90	**1 305 621 740**
201 826 00 43	**1 305 232 911**
201 826 01 43	**1 305 232 912**
201 826 02 43	**1 305 232 913**
201 826 03 43	**1 305 232 914**
202 820 07 43	**1 305 232 923**
202 820 08 43	**1 305 232 924**
202 820 09 28	**1 305 321 996**
202 820 09 66	**1 305 621 542**
202 820 11 43	**1 315 106 906**
202 820 11 66	**1 305 621 977**
202 820 12 43	**1 315 106 907**
202 820 12 66	**1 305 621 978**
202 820 57 66	**1 305 623 055**
202 820 58 66	**1 305 623 056**
202 826 01 43	**1 305 232 921**
202 826 01 80	**1 301 016 043**
202 826 01 90	**1 305 623 016**
202 826 02 43	**1 305 232 922**
202 826 02 80	**1 301 016 044**
202 826 03 43	**1 305 232 919**
202 826 03 90	**1 305 623 018**
202 826 04 43	**1 305 232 920**
202 826 04 90	**1 305 623 019**
202 826 07 43	**1 305 232 923**
202 826 08 43	**1 305 232 924**
202 826 11 43	**1 315 106 906**
202 826 11 80	**1 301 016 057**
202 826 12 43	**1 315 106 907**
202 826 12 80	**1 301 016 058**
202 826 13 80	**1 301 015 189**
202 826 14 80	**1 301 015 190**
203 820 16 85	**1 307 329 088**
203 820 25 26	**1 307 329 072**
203 820 25 64	**0 319 331 203**
203 820 26 64	**0 319 331 204**
203 826 01 91	**1 301 016 074**
203 826 02 91	**1 301 016 075**
210 820 01 56	**0 305 050 001**
210 820 02 56	**0 305 050 002**
210 820 03 61	**0 986 310 203**
210 820 03 66	**1 987 305 005**
210 820 04 66	**1 987 305 006**
210 820 05 66	**1 987 305 007**
210 820 06 66	**1 987 305 008**
210 820 11 61	**0 986 310 205**
210 820 12 61	**0 986 310 206**
210 826 01 90	**1 305 621 662**
210 826 02 90	**1 305 621 663**
210 826 02 91	**1 301 014 248**
210 826 04 91	**1 301 014 248**
210 826 05 90	**1 305 621 662**
210 826 06 90	**1 305 621 663**
210 826 11 80	**1 987 305 009**
220 820 57 26	**1 307 329 052**
220 820 83 26	**1 307 329 052**
220 826 03 90	**1 305 615 361**
220 826 04 90	**1 305 615 363**
221 820 01 56	**0 305 074 001**
221 820 02 56	**0 305 074 002**
230 826 01 80	**1 301 015 206**
230 826 02 80	**1 301 015 207**
251 820 07 56	**0 305 076 001**
251 820 08 56	**0 305 076 002**
314 820 08 61	**0 301 010 501**
322 820 12 61	**0 301 801 510**
347 826 51 89	**1 305 515 900**
454 820 01 20	**0 311 332 001**
454 820 02 20	**0 305 070 002**
454 820 03 20	**0 305 070 001**
638 820 12 64	**0 319 332 103**
638 820 14 64	**0 319 332 203**
638 820 17 64	**0 319 332 104**
638 820 19 64	**0 319 332 204**
711 185 00 50	**0 302 601 008**
723 127 90 01	**1 928 300 246**
7 231 279 004 0	**1 928 300 198**
751 212 20 04	**1 305 620 367**
751 212 20 05	**1 305 543 905**
751 212 20 07	**1 301 015 097**
751 212 30 04	**1 305 620 368**
751 212 70 03	**1 305 321 800**
751 212 70 04	**1 305 621 979**
751 212 71 03	**1 305 363 980**
751 212 80 04	**1 305 621 980**
901 820 07 64	**0 318 337 003**
901 820 10 64	**0 318 337 004**
901 820 17 64	**0 318 337 103**
901 820 18 64	**0 318 337 104**
901 820 23 64	**0 318 337 005**
901 820 24 64	**0 318 337 006**
901 820 25 64	**0 318 337 007**
901 820 26 64	**0 318 337 008**
941 820 01 56	**0 301 709 009**
941 820 17 61	**0 301 081 503**
941 820 18 61	**0 301 081 504**
996 000 20 76 50	**1 928 300 599**

NISSAN

B6550 0F000	**0 319 354 106**
B6555 0F000	**0 319 354 105**
16635 V0700	**9 442 610 042**
16721 9C600	**1 460 283 311**
16826 9C604	**1 460 210 300**
19253 D8701	**2 916 710 618**
19253 D8704	**2 916 710 610**
23244 D9702	**2 916 710 509**
26130 9X100	**0 319 205 204**
26135 9X100	**0 319 205 203**
26550 0F000	**0 319 354 104**
26555 0F000	**0 319 354 103**
26555 0X201	**0 319 355 105**
86550 0X000	**0 319 355 106**
86850 0X000	**0 319 355 104**
86855 0X000	**0 319 355 103**

PEUGEOT

1562 65	**1 460 109 304**
1631 43	**1 460 109 304**
1851 754 000	**0 305 053 002**
1851 754 000	**0 305 053 004**
1851 755 000	**0 305 053 001**
1851 755 000	**0 305 053 003**
1851 756 000	**0 305 054 002**
1851 757 000	**0 305 054 001**
1854 171 000	**0 305 054 012**
1854 172 000	**0 305 054 011**
1941 01	**2 916 710 602**
1978 05	**2 916 710 602**
1978 06	**2 916 710 602**
5933 18	**1 230 210 004**
6204 F8	**0 318 083 513**
6204 G7	**0 318 437 003**
6204 J4	**0 318 411 003**
6204 K8	**0 318 083 523**
6204 L0	**0 318 082 813**
6204 L3	**0 318 412 003**
6204 N3	**0 318 434 003**
6204 Q0	**0 318 439 009**
6204 Q9	**0 305 053 001**
6204 Q9	**0 305 053 003**
6204 R0	**0 305 054 001**
6204 R5	**0 318 012 813**
6204 R8	**0 318 012 713**
6204 S1	**0 318 410 013**
6204 V9	**0 305 054 011**
6204 X7	**0 318 012 513**
6204 Y6	**0 318 113 813**
6204 Y7	**0 318 113 815**
6204 ZT	**0 318 012 013**
6204 ZX	**0 318 123 813**
6204 75	**0 318 490 069**
6204 77	**0 318 590 009**
6204 87	**0 318 490 059**
6205 F8	**0 318 083 514**
6205 G7	**0 318 437 004**
6205 J4	**0 318 411 004**
6205 K8	**0 318 083 524**
6205 L0	**0 318 082 814**
6205 L3	**0 318 412 004**

6205 N3	**0 318 434 004**
6205 Q9	**0 305 053 002**
6205 Q9	**0 305 053 004**
6205 R0	**0 305 054 002**
6205 R5	**0 318 012 814**
6205 R8	**0 318 012 714**
6205 S1	**0 318 410 014**
6205 V9	**0 305 054 012**
6205 X7	**0 318 012 514**
6205 Y6	**0 318 113 814**
6205 Y7	**0 318 113 816**
6205 ZT	**0 318 012 014**
6205 ZX	**0 318 123 814**
6205 77	**0 318 490 089**
6205 85	**0 318 490 069**
6206 33	**0 301 213 604**
6206 35	**0 301 213 674**
6206 36	**0 318 434 006**
6208 E1	**0 318 439 009**
6208 33	**0 301 213 603**
6208 35	**0 301 213 673**
6208 36	**0 318 434 005**
6213 27	**1 987 306 036**
6213 28	**1 987 306 037**
6213 47	**1 987 306 039**
6213 48	**1 987 306 038**
6213 49	**1 987 306 035**
6213 50	**1 987 306 034**
6255 85	**0 318 436 009**
6303 23	**0 319 207 203**
6303 24	**0 319 207 204**
6303 31	**0 318 209 204**
6303 32	**0 318 209 203**
6303 43	**0 318 209 203**
6303 44	**0 318 209 204**
6303 71	**0 318 437 005**
6303 72	**0 318 437 006**
6350 CV	**0 319 386 103**
6350 CW	**0 319 386 105**
6350 FR	**0 319 413 303**
6350 K4	**0 319 370 243**
6350 N1	**0 319 373 205**
6350 N2	**0 319 373 203**
6350 N7	**0 319 370 203**
6350 S0	**0 319 370 305**
6350 S1	**0 319 370 303**
6350 S3	**0 319 372 705**
6350 S4	**0 319 372 703**
6350 T3	**0 319 413 203**
6350 X0	**0 319 385 103**
6350 X2	**0 319 385 203**
6350 X6	**0 319 345 103**
6350 X7	**0 319 345 003**
6350 Y4	**0 319 375 203**
6350 82	**0 319 369 403**
6351 A3	**0 319 374 205**
6351 A4	**0 319 374 206**
6351 A5	**0 319 374 203**
6351 A6	**0 319 374 204**
6351 CV	**0 319 386 104**
6351 CW	**0 319 386 106**
6351 FR	**0 319 413 304**
6351 K4	**0 319 370 244**
6351 N1	**0 319 373 206**
6351 N2	**0 319 373 204**
6351 N7	**0 319 370 204**
6351 S0	**0 319 370 306**
6351 S1	**0 319 370 304**
6351 S3	**0 319 372 706**
6351 S4	**0 319 372 704**
6351 T3	**0 319 413 204**
6351 X0	**0 319 385 104**
6351 X2	**0 319 385 204**
6351 X6	**0 319 345 104**
6351 X7	**0 319 345 004**
6351 Y4	**0 319 375 204**
6351 82	**0 319 369 404**
6351 94	**0 319 371 203**
6351 95	**0 319 371 204**
6352 38	**0 319 369 443**
6352 39	**0 319 369 444**
6352 54	**0 319 371 243**
6352 56	**0 319 371 244**
75 436 34	**0 318 014 604**
75 436 35	**0 318 014 603**
75 436 42	**0 318 014 613**
75 443 641	**0 318 014 614**
7 661 822	**0 318 208 203**
76 946 760	**0 318 311 004**
76 946 770	**0 318 311 003**
81550 0H030	**0 319 345 004**
81550 0H040	**0 319 345 104**
81560 0H030	**0 319 345 003**
81560 0H040	**0 319 345 103**
92 529 762	**0 318 503 009**
92 561 416	**0 318 433 104**
92 561 417	**0 318 433 103**
95 619 509	**0 318 590 009**
95 644 464	**1 460 109 304**
95 668 023	**0 318 410 003**
95 668 024	**0 318 410 004**
96 054 152	**1 928 300 198**
96 205 043	**0 318 412 004**
96 205 044	**0 318 412 003**
96 253 068	**0 305 054 002**
96 253 069	**0 305 054 001**
96 261 380	**1 928 300 283**
96 261 391	**1 928 300 246**
96 268 585	**0 318 410 014**
96 268 586	**0 318 410 013**
96 351 673	**1 928 300 600**
96 384 979	**0 318 439 009**
96 422 813	**0 318 123 814**
96 422 814	**0 318 123 813**

PUCH (STEYR-DAIMLER-PUCH AG)

501 1 0907	**1 230 251 010**
711 1 85 005 0	**0 302 601 001**
711 1 85 005 0	**0 302 601 008**
711 1 85 581 2	**1 305 500 904**
711 1 85 582 1	**1 305 600 030**
711 1 85 583 1	**1 300 212 010**
711 1 85 584 2	**1 305 300 003**
721 1 85 422 0	**0 305 650 004**
721 1 85 442 0	**0 301 608 611**
721 1 85 443 0	**0 301 608 519**

RENAULT

00 03 008 009	**2 916 710 502**
00 03 008 010	**2 916 710 602**
00 03 008 012	**2 916 710 613**
00 03 008 013	**2 916 710 505**
00 03 008 019	**1 410 206 020**
00 03 008 020	**2 440 109 005**
00 03 008 044	**1 411 015 055**
00 03 008 058	**2 916 710 610**
00 03 008 067	**1 410 281 012**
00 03 008 077	**2 916 710 602**
00 03 008 093	**2 916 710 601**
00 03 008 116	**2 916 710 618**
00 03 008 145	**1 420 283 001**
00 03 008 169	**1 411 015 057**
00 03 008 172	**2 916 710 517**
00 03 015 022	**2 916 710 505**
08 35 335 000	**2 916 710 608**
08 54 671 000	**2 916 710 616**
08 54 672 200	**2 440 109 005**
08 55 316 000	**1 410 206 020**
08 55 332 500	**2 916 710 502**
08 55 454 800	**2 916 710 602**
08 70 027 000	**2 916 710 601**
08 70 072 700	**2 916 710 601**
08 70 073 300	**1 411 015 055**
08 70 073 700	**2 916 710 610**
08 70 168 600	**1 420 283 001**
08 70 248 200	**1 411 015 052**
08 70 557 000	**1 411 015 053**
50 00 078 542	**0 306 407 101**
50 00 240 328	**0 307 400 002**
50 00 240 330	**1 305 620 900**
50 00 240 585	**1 305 543 923**
50 00 240 858	**1 305 320 973**
50 00 241 681	**1 315 620 909**
50 00 242 579	**1 411 015 056**
50 00 243 090	**2 916 710 615**
50 00 243 857	**1 305 543 929**
50 00 251 093	**0 311 353 002**
50 00 274 905	**1 305 620 016**
50 00 274 908	**1 301 015 004**
50 00 274 909	**1 301 015 067**
50 00 286 145	**1 305 620 468**
50 00 288 556	**1 305 320 818**
50 00 288 558	**1 305 320 817**
50 00 288 559	**1 305 320 816**
50 00 297 180	**1 305 354 936**
50 00 560 877	**0 301 303 015**
50 00 587 226	**0 302 354 001**
50 00 587 229	**0 302 354 002**
50 00 587 732	**0 301 303 010**
50 00 589 278	**1 305 320 866**
50 00 589 279	**1 305 543 931**
50 00 589 288	**0 301 008 511**
50 00 589 603	**1 305 303 908**
50 00 589 615	**3 341 015 005**
50 00 590 126	**1 305 504 115**
50 00 590 127	**1 305 504 927**
50 00 590 128	**1 305 604 060**
50 00 590 129	**1 300 212 013**
50 00 590 132	**0 305 451 005**
50 00 590 133	**1 305 503 061**
50 00 590 781	**0 302 353 005**
50 00 590 782	**0 302 353 006**
50 00 804 067	**2 916 710 645**
50 00 809 709	**1 305 365 913**
50 00 811 659	**1 330 290 700**
50 00 811 701	**0 302 300 005**
50 00 816 431	**1 305 620 467**
50 00 816 434	**1 301 014 203**
50 00 822 184	**1 420 283 006**
50 00 823 720	**1 305 544 901**
50 00 953 045	**0 305 402 101**
50 00 953 046	**0 305 402 100**
50 01 000 373	**1 305 320 860**
50 01 000 374	**1 305 543 930**
50 01 000 375	**1 301 015 081**
50 01 001 609	**0 314 106 001**
50 01 825 254	**1 305 354 935**
50 01 831 961	**1 121 015 015**
50 01 833 971	**1 460 283 311**
50 01 835 613	**1 460 210 300**
50 01 853 374	**1 460 109 304**
50 10 050 458	**0 301 017 504**
50 10 078 542	**0 306 407 101**
50 10 096 304	**0 305 001 019**
50 10 096 305	**0 306 001 019**
50 10 271 436	**0 307 852 352**

◀ RENAULT

50 10 271 726	**0 307 851 423**
50 10 306 621	**1 928 300 599**
50 10 347 373	**0 305 402 117**
51 00 106 093	**2 916 710 601**
51 00 106 445	**2 916 710 606**
51 00 106 446	**2 916 710 618**
51 00 106 510	**2 916 710 602**
51 00 112 431	**2 916 710 613**
51 00 112 495	**1 410 281 012**
51 00 112 501	**1 411 015 057**
51 00 112 548	**2 916 710 615**
51 56 197 100	**2 916 710 612**
51 56 197 400	**2 916 710 622**
60 00 068 086	**0 314 100 003**
60 25 170 015	**0 318 438 003**
60 25 170 016	**0 318 438 004**
60 25 307 933	**1 928 300 182**
60 25 307 935	**1 928 300 198**
74 20 841 144	**1 928 300 600**
77 00 352 105	**0 318 079 814**
77 00 352 106	**0 318 079 813**
77 00 352 107	**0 318 239 003**
77 00 352 108	**0 318 239 004**
77 00 377 195	**0 318 079 814**
77 00 410 515	**0 319 359 103**
77 00 410 516	**0 319 359 104**
77 00 423 081	**0 318 341 001**
77 00 423 082	**0 318 341 002**
77 00 667 525	**2 916 710 608**
77 00 667 527	**2 916 710 610**
77 00 820 013	**0 318 342 003**
77 00 820 014	**0 318 342 004**
77 00 822 136	**0 319 604 119**
77 01 000 613	**1 305 620 002**
77 01 000 613	**1 305 620 007**
77 01 003 213	**1 305 320 911**
77 01 003 214	**1 305 543 906**
77 01 007 013	**2 916 710 618**
77 01 015 742	**1 410 281 012**
77 01 015 743	**1 411 015 057**
77 01 015 886	**2 916 710 506**
77 01 016 251	**1 305 320 940**
77 01 016 461	**1 450 109 101**
77 01 016 538	**0 311 115 010**
77 01 024 658	**2 430 206 004**
77 01 026 846	**2 916 710 602**
77 01 033 681	**0 319 208 204**
77 01 033 683	**0 319 208 203**
77 01 036 016	**0 319 277 204**
77 01 036 017	**0 319 277 203**
77 01 036 397	**1 987 306 325**
77 01 036 398	**1 987 306 326**
77 01 040 646	**0 319 376 244**
77 01 040 648	**0 319 376 243**
77 01 040 693	**0 318 435 003**
77 01 040 694	**0 318 435 004**
77 01 040 783	**1 460 210 300**
77 01 042 070	**2 460 283 001**
77 01 042 406	**0 319 360 243**
77 01 042 407	**0 319 360 273**
77 01 042 408	**0 319 360 244**
77 01 042 409	**0 319 360 274**
77 01 042 628	**0 318 341 303**
77 01 042 629	**0 318 341 304**
77 01 042 632	**0 318 341 203**
77 01 042 633	**0 318 341 204**
77 01 044 519	**0 318 079 813**
77 01 044 521	**0 318 079 814**
77 01 044 522	**0 318 239 003**
77 01 044 523	**0 318 239 004**
77 01 203 865	**1 987 306 216**
77 01 203 866	**1 987 306 215**
77 01 203 867	**0 318 342 003**
77 01 203 868	**0 318 342 004**
77 01 205 664	**0 318 435 006**
77 01 205 665	**0 318 435 005**
77 11 130 023	**0 319 377 243**
77 11 130 024	**0 319 377 244**
82 00 133 629	**0 318 239 006**
82 00 133 631	**0 318 239 005**
82 00 163 519	**0 318 126 713**
82 00 163 521	**0 318 126 714**
82 00 163 914	**0 319 209 103**
82 00 163 916	**0 319 209 203**
82 00 163 918	**0 319 209 104**
82 00 163 919	**0 319 209 204**
82 00 263 356	**0 319 209 403**
82 00 263 364	**0 319 209 404**
82 00 336 828	**0 319 368 215**
82 00 336 830	**0 319 368 206**
82 00 336 831	**0 319 368 205**
82 00 336 832	**0 319 368 216**
82 00 336 833	**0 319 368 213**
82 00 336 834	**0 319 368 204**
82 00 336 835	**0 319 368 203**
82 00 336 836	**0 319 368 214**
82 00 336 837	**0 319 368 211**
82 00 336 839	**0 319 368 202**
82 00 336 840	**0 319 368 201**
82 00 336 841	**0 319 368 212**
82 00 760 832	**F 00R 0P0 253**
82 00 765 852	**F 00N 202 338**

RVI (RENAULT VEHICULES IND.)

50 00 293 054	**1 461 015 302**
50 01 833 971	**2 460 283 001**
50 10 306 621	**1 928 300 599**
56 00 679 339	**2 469 403 070**
56 00 679 386	**F 00R 0P0 253**
56 00 679 389	**F 00R 0P0 743**
56 00 679 404	**F 00R 0P0 577**
56 00 735 573	**F 00N 202 337**

SCANIA

1308475	**0 301 022 703**
1308476	**0 301 022 704**
1308484	**0 301 022 503**
1308485	**0 301 022 504**
1314211	**1 121 015 015**
1317514	**0 301 710 100**
1332729	**2 916 710 606**
1347013	**1 121 015 011**
1348955	**1 420 283 006**
181640	**2 440 109 005**
182524	**2 916 710 618**
189119	**3 315 620 905**
192039	**1 300 212 013**
192078	**2 916 710 509**
192633	**2 916 710 610**
192820	**2 916 710 602**
20711302	**1 300 212 017**
20740000	**0 307 100 004**
211077	**2 916 710 601**
220307	**1 305 604 020**
235469	**1 305 600 030**
235472	**1 305 300 003**
243457	**3 315 620 912**
243523	**1 305 604 100**
243524	**1 305 604 110**
250582	**1 300 212 010**
250583	**1 305 601 012**
258755	**1 305 604 026**
258756	**1 305 604 027**
258758	**1 305 314 930**
270873	**1 420 283 001**
273366	**2 430 206 004**
273832	**8 785 300 039**
275366	**2 430 206 004**
280552	**1 301 014 030**
280553	**1 305 620 962**
280557	**1 305 620 960**
280759	**2 410 283 010**
280873	**1 420 283 001**
280891	**1 305 620 963**
280895	**1 305 620 961**
280966	**1 301 014 203**
289915	**0 301 022 701**
289916	**0 301 022 702**
290357	**1 450 109 101**
297635	**0 301 022 501**
297636	**0 301 022 502**
301843	**0 315 109 003**
301844	**0 315 109 004**
333079	**1 305 543 936**
338079	**1 305 543 936**
338080	**1 305 543 937**
339733	**1 301 014 030**
340341	**1 305 620 473**
340342	**1 305 620 472**
421856	**0 314 107 002**
421858	**0 314 107 002**
421859	**0 311 316 004**
421860	**0 313 050 005**
4223566	**1 928 300 283**
4224655	**1 928 300 246**
424419	**1 301 015 135**
424817	**1 305 620 974**
583009	**0 307 301 004**
583181	**0 305 001 004**
583181	**0 305 001 005**
583181	**0 305 001 011**
583181	**0 305 001 019**
65101101	**1 305 601 022**
65101202	**1 300 212 010**
651664	**0 307 100 006**
65901201	**1 305 500 904**
65901202	**1 305 600 030**
65901204	**1 305 300 003**
698569	**1 305 620 002**

VALEO

029 460	**1 305 303 961**
067 630	**0 305 406 001**
067 636	**0 306 407 001**
068 685	**0 306 900 003**
068 716	**0 305 001 004**
068 730	**0 305 603 001**
068 738	**0 306 606 001**
082 649	**1 307 022 067**
082 650	**1 307 022 066**
082 667	**1 305 231 028**
082 668	**1 305 231 029**
082 673	**1 307 022 070**
082 674	**1 307 022 071**
082 677	**1 307 022 075**
082 678	**1 307 022 074**
082 681	**1 307 022 081**
082 682	**1 307 022 080**
083 158	**0 319 208 203**

083 159	**0 319 208 204**
084321	**0 318 222 004**
084323	**0 318 222 204**
084325	**0 318 222 203**
084331	**0 318 222 003**
084 368	**0 318 221 004**
084 369	**0 318 221 003**
084 393	**0 319 369 404**
084 394	**0 319 369 403**
084435	**0 307 852 300**
084512	**0 318 218 203**
084513	**0 318 218 204**
084 520	**0 319 204 203**
084 521	**0 319 204 204**
084 522	**0 319 329 413**
084 523	**0 319 329 414**
085 141	**0 319 344 143**
085 142	**0 319 344 144**
085170	**0 319 207 203**
085 171	**0 319 207 204**
085 179	**0 307 852 315**
085 180	**1 305 230 133**
085 181	**1 305 230 134**
085 265	**1 307 022 021**
085 266	**1 307 022 022**
085 267	**1 307 022 039**
085 268	**1 307 022 040**
085 294	**1 305 232 921**
085 295	**1 305 232 922**
085 296	**1 305 232 923**
085 297	**1 305 232 924**
085 502	**1 987 305 017**
085 503	**1 987 305 018**
085 539	**0 318 338 003**
085 540	**0 318 338 004**
085 541	**0 318 338 013**
085 542	**0 318 338 014**
085 729	**1 307 022 194**
085 730	**1 307 022 195**
085733	**1 315 106 918**
085734	**1 315 106 919**
085 972	**0 319 377 243**
085 973	**0 319 377 244**
086698	**0 319 359 103**
086699	**0 319 359 104**
086700	**0 319 361 203**
086701	**0 319 361 204**
086754	**0 319 348 203**
086755	**0 319 348 204**
088040	**0 319 385 103**
088041	**0 319 385 104**
088373	**0 319 362 243**
088374	**0 319 362 244**
088375	**0 319 362 273**
088376	**0 319 362 274**
133 857V	**0 132 801 209**
133 860D	**0 132 801 210**
3 108 471	**1 928 300 600**
3 109 833	**1 928 300 600**
63153	**0 318 219 204**
63154	**0 318 219 203**

VAN WEZEL

0135901	**0 318 203 013**
0135902	**0 318 203 014**
0135905	**0 318 203 213**
0135906	**0 318 203 214**
0145921	**0 318 304 003**
0145922	**0 318 304 004**
0145923	**0 318 304 103**
0145924	**0 318 304 104**
0145995	**0 318 401 003**
0145996	**0 318 401 004**
0146925	**0 318 305 003**
0146926	**0 318 305 004**
0155907	**0 311 322 003**
0155995	**0 318 402 003**
0155996	**0 318 402 004**
0156999	**0 318 490 119**
0175901	**0 318 204 003**
0175902	**0 318 204 004**
0175905	**0 318 204 203**
0175906	**0 318 204 204**
0308901	**1 305 230 904**
0308902	**1 305 230 905**
0312905	**1 305 232 024**
0312906	**1 305 232 025**
0315935	**0 318 307 003**
0315936	**0 318 307 004**
0320901	**1 305 230 906**
0320902	**1 305 230 907**
0320961	**1 307 022 054**
0320962	**1 307 022 055**
0322903	**1 305 230 916**
0322904	**1 305 230 917**
0322961	**1 307 022 101**
0322962	**1 307 022 102**
0323907	**1 315 106 920**
0323908	**1 315 106 921**
0323963M	**1 307 022 194**
0323964M	**1 307 022 195**
0325995	**0 305 063 001**
0325996	**0 305 063 002**
0623963	**1 305 210 900**
0623964	**1 305 210 901**
0639995	**0 318 408 003**
0639996	**0 318 408 004**
0639997	**0 318 408 013**
0639998	**0 318 408 014**
0646901	**0 311 328 001**
0646902	**0 311 328 002**
0646905	**0 311 328 003**
0646906	**0 311 328 004**
0647903	**0 311 329 001**
0647904	**0 311 329 002**
0647907	**0 311 329 003**
0647908	**0 311 329 004**
0648901	**0 311 330 001**
0648902	**0 311 330 002**
0648905	**0 311 330 005**
0648906	**0 311 330 006**
0651903	**0 311 327 001**
0651904	**0 311 327 002**
0651907	**0 311 327 005**
0651908	**0 311 327 006**
0938995	**0 318 410 003**
0938996	**0 318 410 004**
0939995	**0 318 410 013**
0939996	**0 318 410 014**
0948905	**0 318 210 203**
0948906	**0 318 210 204**
1601901	**0 318 216 003**
1601902	**0 318 216 004**
1601913	**0 318 216 009**
1601921	**0 318 322 003**
1601922	**0 318 322 004**
1602905	**0 318 216 203**
1602906	**0 318 216 204**
1610905	**0 318 210 203**
1610906	**0 318 210 204**
1615925	**0 318 317 013**
1615926	**0 318 317 014**
1615995	**0 318 414 003**
1615996	**0 318 414 004**
1636921	**0 318 350 203**
1636922	**0 318 350 204**
1735901	**0 318 222 203**
1735902	**0 318 222 204**
1735905	**0 318 222 003**
1735906	**0 318 222 004**
1735995	**0 318 421 003**
1735996	**0 318 421 004**
1740901	**0 318 212 203**
1740902	**0 318 212 204**
1745909	**0 318 208 203**
1745910	**0 318 208 204**
1747905	**0 318 209 203**
1747906	**0 318 209 204**
1747995	**0 318 412 003**
1747996	**0 318 412 004**
1751901	**0 318 219 003**
1751902	**0 318 219 004**
1751905	**0 318 219 203**
1751906	**0 318 219 204**
1751921	**0 318 325 203**
1751922	**0 318 325 204**
1751995	**0 318 419 003**
1751996	**0 318 419 004**
1752905	**0 318 218 203**
1752906	**0 318 218 204**
1754995	**0 318 415 003**
1754996	**0 318 415 004**
1756995	**0 318 490 029**
1757921	**0 318 313 203**
1757922	**0 318 313 204**
1758905	**0 318 211 203**
1758906	**0 318 211 204**
1758907	**0 318 211 003**
1758908	**0 318 211 004**
1758927	**0 318 314 203**
1758928	**0 318 314 204**
1758931	**0 318 314 003**
1758932	**0 318 314 004**
1763905	**0 318 230 203**
1763906	**0 318 230 204**
1771907	**0 318 205 204**
1771908	**0 318 205 203**
1772905	**0 318 206 203**
1772906	**0 318 206 204**
1773995	**0 318 431 003**
1773996	**0 318 431 004**
1777921	**0 318 334 203**
1777922	**0 318 334 204**
1777925	**0 318 334 213**
1777926	**0 318 334 214**
1826993M	**0 307 853 301**
3003934	**1 305 621 931**
3010901	**1 305 233 051**
3010902	**1 305 233 052**
3020901	**1 305 232 911**
3020902	**1 305 232 912**
3020977	**1 305 620 982**
3024901	**1 305 233 928**
3024902	**1 305 233 929**
3024961	**1 307 022 111**
3024962	**1 307 022 112**
3028995	**0 305 050 001**
3028996	**0 305 050 002**
3035901	**1 305 233 932**
3035902	**1 305 233 933**
3035905	**1 305 233 938**
3035906	**1 305 233 939**
3710902	**1 305 233 909**
3712941	**1 307 022 066**
3712942	**1 307 022 067**
3712947M	**1 307 022 080**

3712948M	**1 307 022 081**
3712949	**1 307 022 070**
3712950	**1 307 022 071**
3760943	**1 307 022 039**
3760944	**1 307 022 040**
3763921	**0 318 338 003**
3763922	**0 318 338 004**
3763923	**0 318 338 013**
3763924	**0 318 338 014**
3766931	**0 318 339 203**
3766932	**0 318 339 204**
3766933	**0 318 339 223**
3766934	**0 318 339 224**
3766935	**0 318 339 213**
3766936	**0 318 339 214**
3766937	**0 318 339 233**
3766938	**0 318 339 234**
4037995	**0 305 053 001**
4037996	**0 305 053 002**
4038995	**0 305 054 001**
4038996	**0 305 054 002**
4038997	**0 305 054 011**
4038998	**0 305 054 012**
4047997	**0 318 434 003**
4047998	**0 318 434 004**
4360995	**0 318 438 003**
4360996	**0 318 438 004**
4391901	**0 318 239 003**
4391902	**0 318 239 004**
4903905	**0 318 244 203**
4903906	**0 318 244 204**
5817931	**0 318 347 203**
5817932	**0 318 347 204**
5878905	**0 311 325 005**
5878906	**0 311 325 006**

VAUXHALL

90421591	**1 987 306 040**
90421592	**1 987 306 041**
90421593	**0 318 108 613**
90421594	**0 318 108 614**
90421595	**0 318 108 811**
90421595	**0 318 108 813**
90421596	**0 318 108 812**
90421596	**0 318 108 814**
90443738	**0 318 108 815**
90443739	**0 318 108 816**
90443740	**0 318 108 615**
90443741	**0 318 108 616**
90443745	**1 987 306 043**
90443746	**1 987 306 042**
90511095	**0 318 118 813**
90511097	**0 318 118 814**

VOLVO

1194515	**0 305 601 100**
11990671	**0 301 303 034**
1212729	**0 311 363 002**
1212962	**0 301 600 606**
1214942	**0 311 363 003**
1214943	**0 311 363 004**
1215282	**0 301 813 601**
1244950	**0 311 363 002**
1246342	**1 390 591 016**
1259592	**0 305 402 100**
1269608	**2 430 206 010**
1277105	**0 305 600 004**
1277105	**0 305 601 001**
1277105	**0 305 601 004**
1277107	**0 306 603 003**
1277107	**0 306 604 001**
12771078	**0 306 603 003**
12771078	**0 306 604 001**
14211848	**0 301 711 101**
15319	**2 916 710 506**
1573426	**0 301 810 102**
1593963	**0 305 001 004**
1594154	**0 305 001 005**
1594763	**0 132 008 305**
16699617	**1 420 283 006**
1696651	**1 305 320 816**
1696652	**1 305 320 817**
1696653	**1 305 540 932**
1696657	**1 301 015 097**
1696658	**1 305 620 367**
1696659	**1 305 620 368**
1696661	**1 305 543 905**
1697791	**1 330 290 700**
1698763	**1 121 015 011**
1698897	**1 301 014 203**
18840	**2 916 710 613**
190990	**2 916 710 602**
2284226	**1 305 354 911**
233138	**1 410 206 020**
233243	**1 305 604 020**
233273	**1 305 500 904**
233276	**1 305 300 003**
233379	**2 916 710 602**
233598	**1 305 300 001**
238326	**1 410 281 012**
238453	**1 305 601 080**
239881	**2 916 710 601**
239895	**1 411 015 055**
239897	**2 916 710 610**
239969	**1 305 601 080**
240017	**2 916 710 618**
240117	**1 305 600 010**
240118	**1 305 600 030**
240119	**1 305 600 040**
240205	**1 305 311 050**
240206	**1 305 601 082**
240518	**0 301 600 506**
240607	**1 000 206 000**
241126	**1 305 313 041**
241133	**1 305 604 100**
241172	**1 305 600 010**
241229	**1 305 600 040**
241432	**2 916 710 502**
241471	**2 916 720 316**
241478	**2 916 710 505**
241480	**1 305 504 115**
241482	**1 305 504 927**
241483	**1 305 604 060**
241501	**2 916 710 509**
241550	**2 916 710 614**
241989	**1 420 283 001**
243133	**0 301 600 506**
243488	**2 916 710 602**
244460	**1 305 311 907**
25284	**2 440 109 005**
25309	**1 300 212 013**
298875	**1 390 591 016**
30756062	**1 230 210 039**
3090261	**1 121 015 015**
3411093	**0 305 700 001**
3411094	**0 305 700 002**
3412729	**1 305 621 067**
3412730	**1 305 621 068**
3413161	**1 301 015 142**
3413162	**1 301 015 143**
3447239	**1 305 621 211**
3447240	**1 305 621 212**
3515104	**0 307 851 400**
3518584	**1 305 621 941**
3518585	**1 305 621 942**
6212654	**2 916 730 059**
6232933	**1 305 601 012**
6232949	**1 305 301 030**
6233856	**1 305 515 900**
6234655	**1 305 320 902**
6235460	**1 305 604 020**
6236713	**0 307 301 004**
6611887	**0 300 181 003**
6611888	**0 307 100 005**
6642014	**1 300 212 017**
6772780	**0 305 402 001**
6775157	**1 305 365 924**
6775158	**1 305 620 987**
6775159	**1 305 620 989**
6775161	**1 305 544 901**
6775257	**1 305 365 926**
6775258	**1 305 620 986**
6778879	**1 305 355 935**
6793923	**0 301 017 705**
681138	**0 311 363 003**
681139	**0 311 363 004**
72294	**1 305 601 080**
7233379	**2 916 710 602**
7238959	**2 916 710 619**
7240119	**1 305 600 040**
76562	**1 300 212 010**
76891	**1 305 305 020**
77624	**0 307 100 005**
77689	**1 300 212 012**
844176	**1 460 210 300**
844179	**1 460 210 300**
844295	**2 430 206 004**
845744	**1 460 283 311**
845783	**2 916 710 608**
862422	**2 410 283 010**
8642838	**2 916 710 602**
8648094	**0 305 065 001**
8648095	**0 305 065 002**
8678699	**0 305 075 001**
8678700	**0 305 075 002**
870204	**1 410 206 020**
874493	**1 928 300 599**
874494	**1 928 300 600**
9447984	**0 307 851 400**

VW (VOLKSWAGEN)

TC1 132 471	**2 916 710 601**
TC1 132 473	**2 916 710 602**
ZBC 911 499	**1 000 207 001**
000 398 067	**1 230 210 004**
026 133 483	**2 430 206 009**
026 905 243 1	**1 230 210 017**
026 905 243 3	**9 231 081 028**
026 905 261	**1 230 210 017**
028 130 663	**1 460 283 306**
035 133 487 A	**2 430 206 010**
035 911 499	**1 000 207 006**
049 905 341	**1 231 015 002**
052 905 261	**1 230 210 004**
068 127 405 1	**2 916 710 602**
068 130 717 B	**1 461 015 301**
068 145 119	**1 230 210 004**
074 130 717	**1 460 206 305**
1C0 941 029 A	**0 301 163 603**
1C0 941 030 A	**0 301 163 604**
1C0 941 115 B	**1 305 615 466**
1C0 941 115 C	**1 305 615 458**
1C0 941 116 B	**1 305 615 467**
1C0 941 116 C	**1 305 615 459**

1C0 941 119	**1 301 014 280**
1C0 941 295 A	**0 307 853 311**
1C2 941 029 A	**0 301 163 603**
1C2 941 029 D	**0 301 163 603**
1C2 941 030 A	**0 301 163 604**
1C2 941 030 D	**0 301 163 604**
1H6 941 001 AK	**0 301 034 811**
1H6 941 001 AL	**0 301 034 801**
1H6 941 015 N	**0 301 034 301**
1H6 941 016 N	**0 301 034 302**
1J0 941 295 A	**0 307 853 304**
1J0 941 641	**1 307 329 023**
1J0 941 651	**1 307 329 051**
1J2 941 017 E	**1 305 305 913**
1J2 941 018 E	**1 305 305 914**
1J6 945 095 BA	**0 318 348 203**
1J6 945 095 BA	**0 319 348 203**
1J6 945 095 BB	**0 318 348 213**
1J6 945 095 BB	**0 319 348 213**
1J6 945 095 P	**0 318 348 103**
1J6 945 095 Q	**0 318 348 103**
1J6 945 096 BA	**0 318 348 204**
1J6 945 096 BA	**0 319 348 204**
1J6 945 096 BB	**0 318 348 214**
1J6 945 096 BB	**0 319 348 214**
1J6 945 096 Q	**0 318 348 104**
1J6 945 096 R	**0 318 348 104**
1J9 945 095 H	**0 319 378 203**
1J9 945 095 K	**0 319 379 103**
1J9 945 096 H	**0 319 378 204**
1J9 945 096 K	**0 319 379 104**
1K6 941 031 A	**0 301 212 671**
1K6 941 032 A	**0 301 212 672**
1K6 941 039 A	**0 301 212 673**
1K6 941 040 A	**0 301 212 674**
1K6 945 093 E	**0 318 348 015**
1K6 945 093 E	**0 319 349 105**
1K6 945 093 F	**0 318 348 025**
1K6 945 093 F	**0 319 349 115**
1K6 945 094 E	**0 318 348 016**
1K6 945 094 E	**0 319 349 106**
1K6 945 094 F	**0 318 348 026**
1K6 945 094 F	**0 319 349 116**
1K6 945 095 E	**0 318 348 005**
1K6 945 095 E	**0 319 349 103**
1K6 945 096 E	**0 318 348 006**
1K6 945 096 E	**0 319 349 104**
1M6 945 107 01C	**0 319 367 245**
1M6 945 108 01C	**0 319 367 246**
1M6 945 111 01C	**0 319 367 243**
1M6 945 112 01C	**0 319 367 244**
1M6 945 257	**0 319 367 273**
1M6 945 258	**0 319 367 274**
1U9 945 111	**0 318 346 203**
1U9 945 112	**0 318 346 204**
1U9 945 257	**1 987 306 011**
1U9 945 258	**1 987 306 012**
1Z9 945 095	**0 319 346 103**
1Z9 945 096	**0 319 346 104**
111 941 119	**1 300 212 012**
111 941 119 A	**1 300 212 012**
111 941 151 E	**1 305 314 124**
112 941 039 N	**0 301 608 519**
112 941 115 A	**1 305 604 081**
113 911 499	**1 000 206 000**
113 941 115 A	**1 305 604 005**
113 941 151 A	**1 305 313 907**
113 941 753 F	**0 301 608 107**
120 474	**1 230 210 017**
121 250	**9 231 081 028**
137 399	**1 000 207 001**
171 941 105 D	**1 305 303 961**
193 941 703	**0 305 406 001**
211 941 112 G	**1 305 504 932**
211 941 115 F	**1 305 604 089**
211 941 116 F	**1 305 604 087**
211 941 151 F	**1 305 314 127**
211 941 152 F	**1 305 314 126**
214 941 115	**1 305 604 092**
271 941 095	**1 300 212 011**
3A0 941 067	**1 987 305 017**
3A0 941 068	**1 987 305 018**
3B5 945 095 AE	**0 319 353 203**
3B5 945 095 F	**0 319 352 153**
3B5 945 095 J	**0 319 352 253**
3B5 945 095 J	**0 319 352 344**
3B5 945 095 J	**0 319 352 353**
3B5 945 095 K	**0 319 352 343**
3B5 945 096 AE	**0 319 353 204**
3B5 945 096 G	**0 319 352 154**
3B5 945 096 J	**0 319 352 354**
3B5 945 096 K	**0 319 352 254**
3B5 945 111 D	**0 319 352 143**
3B5 945 111 E	**0 319 352 243**
3B5 945 112 H	**0 319 352 144**
3B5 945 112 J	**0 319 352 244**
3C5 945 093 E	**0 319 380 703**
3C5 945 094 E	**0 319 380 704**
3C5 945 095 C	**0 319 380 705**
3C5 945 096 C	**0 319 380 706**
3C9 945 093	**0 319 381 703**
3C9 945 094	**0 319 381 704**
3C9 945 095 C	**0 319 381 705**
3C9 945 096 C	**0 319 381 706**
311 941 115 C	**1 305 604 050**
311 941 119	**1 300 212 013**
312 941 115 C	**1 305 604 051**
312 941 151 C	**1 305 313 911**
321 941 105 K	**1 305 303 958**
321 941 295	**0 307 851 305**
321 941 295 A	**0 307 851 305**
322 941 105 E	**1 305 303 957**
325 906 377	**1 928 300 198**
357 907 498 A	**1 928 300 246**
4A0 907 447	**1 928 300 246**
4A0 941 115 J	**1 987 305 013**
4A0 941 116 J	**1 987 305 014**
4A0 953 049 D	**1 987 305 011**
4A0 953 050 D	**1 987 305 012**
4B9 945 095 D	**0 318 307 003**
4B9 945 095 F	**0 318 307 103**
4B9 945 096 D	**0 318 307 004**
4B9 945 096 F	**0 318 307 104**
4B9 945 217	**0 318 307 003**
4B9 945 218	**0 318 307 004**
4B9 945 221	**1 987 306 027**
4B9 945 695 D	**0 318 307 509**
4D0 907 476 A	**1 307 329 023**
4D0 907 476 B	**1 307 329 066**
4D0 941 029 A	**1 307 022 174**
4D0 941 029 D	**1 307 022 178**
4D0 941 029 D	**1 307 022 224**
4D0 941 029 E	**1 307 022 218**
4D0 941 029 H	**1 307 022 224**
4D0 941 030 A	**1 307 022 175**
4D0 941 030 B	**1 307 022 177**
4D0 941 030 D	**1 307 022 179**
4D0 941 030 D	**1 307 022 225**
4D0 941 030 E	**1 307 022 219**
4D0 941 030 H	**1 307 022 225**
4D0 941 115	**1 305 621 607**
4D0 941 115 A	**1 305 621 609**
4D0 941 116	**1 305 621 608**
4D0 941 116 A	**1 305 621 610**
4D0 941 119	**1 301 014 241**
4D0 941 295	**0 307 852 315**
4D0 945 093 G	**0 319 308 213**
4D0 945 094 E	**0 319 308 214**
4D0 945 095	**0 319 308 203**
4D0 945 096	**0 319 308 204**
4D0 945 217 A	**0 319 308 243**
4D0 945 218 A	**0 319 308 244**
4D0 945 223 B	**0 319 308 253**
4D0 945 224	**0 319 308 254**
4D0 953 049	**1 315 106 910**
4D0 953 050	**1 315 106 911**
4L0 945 093	**0 319 309 203**
4L0 945 093 A	**0 319 309 213**
4L0 945 094	**0 319 309 204**
4L0 945 094 A	**0 319 309 214**
4L0 945 095	**0 319 309 205**
4L0 945 095 A	**0 319 309 215**
4L0 945 096	**0 319 309 206**
4L0 945 096 A	**0 319 309 216**
411 941 653 A	**0 301 303 015**
441 941 029 B	**1 307 022 088**
441 941 029 F	**1 307 022 088**
441 941 030 B	**1 307 022 089**
441 941 030 F	**1 307 022 089**
441 941 105	**1 305 321 931**
441 941 115 A	**1 305 621 180**
441 941 116 A	**1 305 621 181**
441 941 119	**1 301 014 078**
441 941 151	**1 305 321 928**
441 941 178	**1 305 542 129**
441 941 626 A	**1 305 230 911**
441 941 626 B	**1 305 230 911**
442 941 116	**1 305 621 183**
443 941 029 A	**1 307 022 005**
443 941 030 A	**1 307 022 006**
443 941 119	**1 301 014 204**
443 941 119	**1 301 014 208**
443 941 151 A	**1 305 363 934**
443 953 049	**1 305 232 024**
443 953 050	**1 305 232 025**
444 941 029	**1 307 022 007**
444 941 030	**1 307 022 008**
444 941 115	**1 305 620 526**
444 941 116	**1 305 620 527**
447 941 029 E	**1 307 022 901**
447 941 029 F	**1 307 022 903**
447 941 030 E	**1 307 022 902**
447 941 115	**1 305 620 581**
447 941 116	**1 305 620 582**
447 941 119	**1 301 014 209**
447 941 151 C	**1 305 320 728**
447 941 152 C	**1 305 320 729**
447 941 625	**1 305 320 711**
447 941 626	**1 305 320 712**
448 941 030 B	**1 307 022 065**
448 941 115	**1 305 620 583**
448 941 116	**1 305 620 584**
481 941 713	**1 305 540 914**
481 941 715	**1 301 015 067**
481 941 719	**1 305 620 016**
481 941 727	**1 305 320 940**
5P0 945 111 9B9	**0 319 364 243**
5P0 945 112 9B9	**0 319 364 244**
5P0 945 223	**0 319 364 343**
5P0 945 224	**0 319 364 344**
5P5 945 111 9B9	**0 319 364 043**
5P5 945 112 9B9	**0 319 364 044**
5P5 945 223	**0 319 364 143**
5P5 945 224	**0 319 364 144**
6H0 945 111	**0 318 345 003**
6H0 945 111 E01 C	**0 319 365 443**
6H0 945 111 E2U 6	**0 319 365 143**
6H0 945 112	**0 318 345 004**
6H0 945 112 E01 C	**0 319 365 444**
6H0 945 112 E2U 6	**0 319 365 144**

◀ VW

6H0 945 257	**1 987 306 009**
6H0 945 257 A	**1 987 306 009**
6H0 945 257 B	**0 319 365 173**
6H0 945 258	**1 987 306 008**
6H0 945 258	**1 987 306 010**
6H0 945 258 A	**1 987 306 010**
6H0 945 258 B	**0 319 365 174**
6H0 945 528 A	**1 987 306 007**
6H0 953 041 D	**0 318 244 203**
6H0 953 042 D	**0 318 244 204**
6H2 941 015 C	**0 318 096 813**
6H2 941 016 C	**0 318 096 814**
6L6 945 107	**0 319 366 145**
6L6 945 107 C	**0 319 366 443**
6L6 945 108	**0 319 366 146**
6L6 945 108 C	**0 319 366 444**
6L6 945 111 B	**0 319 366 143**
6L6 945 111 C	**0 319 366 445**
6L6 945 112 B	**0 319 366 144**
6L6 945 112 C	**0 319 366 446**
6L6 945 257	**0 319 366 173**
6L6 945 258	**0 319 366 174**
6Q6 945 095 G	**0 319 362 243**
6Q6 945 095 M	**0 319 363 203**
6Q6 945 096 G	**0 319 362 244**
6Q6 945 096 M	**0 319 363 204**
6Q6 945 257 A	**0 319 362 273**
6Q6 945 258 A	**0 319 362 274**
6X0 945 095 D	**0 318 347 203**
6X0 945 096 E	**0 318 347 204**
6X0 945 111	**0 318 347 203**
6X0 945 112	**0 318 347 204**
6X2 941 751 C	**0 318 099 813**
6X2 941 751 F	**0 318 099 813**
6X2 941 751 H	**0 318 099 813**
6X2 941 751 J	**0 301 194 701**
6X2 941 751 J	**0 318 099 813**
6X2 941 752 C	**0 318 099 814**
6X2 941 752 F	**0 318 099 814**
6X2 941 752 H	**0 318 099 814**
6X2 941 752 J	**0 301 194 702**
6X2 941 752 J	**0 318 099 814**
600 941 015 D	**0 301 017 605**
600 941 016 D	**0 301 017 606**
600 941 295	**0 307 851 306**
7D0 906 377	**1 928 300 198**
7L6 945 093 AA	**0 319 351 115**
7L6 945 093 H	**0 319 350 105**
7L6 945 093 P	**0 319 350 115**
7L6 945 093 T	**0 319 351 105**
7L6 945 094 AA	**0 319 351 116**
7L6 945 094 H	**0 319 350 106**
7L6 945 094 P	**0 319 350 116**
7L6 945 094 T	**0 319 351 106**
7L6 945 095 K	**0 319 350 103**
7L6 945 095 R	**0 319 351 103**
7L6 945 095 S	**0 319 351 113**
7L6 945 096 K	**0 319 350 104**
7L6 945 096 R	**0 319 351 104**
7L6 945 096 S	**0 319 351 114**
7M0 941 119	**1 301 014 249**
7M0 941 295	**0 307 852 312**
7M0 953 041 J	**0 311 325 001**
7M0 953 042 J	**0 311 325 002**
7M0 953 049 D	**0 311 325 005**
7M0 953 049 F	**0 311 325 005**
7M0 953 050 D	**0 311 325 006**
7M0 953 050 F	**0 311 325 006**
7M1 941 152	**1 305 321 844**
7M2 941 015 D	**0 301 048 701**
7M2 941 015 H	**0 301 048 701**
7M2 941 015 K	**0 301 048 701**
7M2 941 016 D	**0 301 048 702**
7M2 941 016 H	**0 301 048 702**
7M2 941 016 K	**0 301 048 702**
7M2 941 017 D	**0 301 048 701**
7M2 941 017 P	**0 301 048 701**
7M2 941 018 D	**0 301 048 702**
7M2 941 018 N	**0 301 048 702**
7M2 941 152	**1 305 321 846**
7M4 941 015 AH	**0 301 182 601**
7M4 941 015 L	**0 301 182 601**
7M4 941 016 AH	**0 301 182 602**
7M4 941 016 L	**0 301 182 602**
71 374 358	**9 231 081 028**
8A0 941 295	**0 307 851 346**
8A0 945 217 B	**0 319 310 253**
8A0 945 218 B	**0 319 310 254**
8A0 945 223 A	**0 319 310 243**
8A0 945 224 A	**0 319 310 244**
8A0 953 049 A	**1 305 230 916**
8A0 953 049 B	**1 305 230 914**
8A0 953 050 A	**1 305 230 917**
8A0 953 050 B	**1 305 230 915**
8A0 953 055 A	**0 319 202 203**
8A0 953 056 A	**0 319 202 204**
8D0 941 029 B	**1 307 022 194**
8D0 941 029 C	**1 307 022 200**
8D0 941 029 D	**1 307 022 206**
8D0 941 029 E	**1 307 022 923**
8D0 941 030 B	**1 307 022 195**
8D0 941 030 C	**1 307 022 201**
8D0 941 030 D	**1 307 022 207**
8D0 941 030 E	**1 307 022 924**
8D0 941 115 C	**1 305 621 698**
8D0 941 116 C	**1 305 621 699**
8D0 941 119 A	**1 301 014 252**
8D0 941 191	**1 301 016 055**
8D0 941 192	**1 301 016 056**
8D0 953 049 A	**1 315 106 918**
8D0 953 049 B	**1 315 106 920**
8D0 953 050 A	**1 315 106 919**
8D0 953 050 B	**1 315 106 921**
8D9 945 095	**0 319 305 213**
8D9 945 095 A	**0 319 305 203**
8D9 945 095 D	**0 319 306 203**
8D9 945 096	**0 319 305 214**
8D9 945 096 A	**0 319 305 204**
8D9 945 096 D	**0 319 306 204**
8D9 945 111	**0 319 305 243**
8D9 945 112	**0 319 305 244**
8E0 941 699	**0 305 063 001**
8E0 941 699 A	**0 305 067 001**
8E0 941 699 B	**0 305 063 003**
8E0 941 700	**0 305 063 002**
8E0 941 700 A	**0 305 067 002**
8E0 941 700 B	**0 305 063 004**
8E9 945 095	**0 319 307 203**
8E9 945 096	**0 319 307 204**
8H0 941 699	**0 305 066 001**
8H0 941 699 A	**0 305 066 001**
8H0 941 700	**0 305 066 002**
8H0 941 700 A	**0 305 066 002**
8J0 941 699	**0 305 080 001**
8J0 941 700	**0 305 080 002**
8L0 945 095	**0 319 301 213**
8L0 945 095 A	**0 319 301 203**
8L0 945 095 B	**0 319 303 203**
8L0 945 095 C	**0 319 303 213**
8L0 945 096	**0 319 301 214**
8L0 945 096 A	**0 319 301 204**
8L0 945 096 B	**0 319 303 214**
8L0 945 096 C	**0 319 303 204**
8L0 945 111	**0 319 301 243**
8L0 945 112	**0 319 301 244**
8L0 953 049	**1 987 305 019**
8L0 953 050	**1 987 305 020**
8P0 945 095	**0 319 304 203**
8P0 945 095 A	**0 319 304 213**
8P0 945 096	**0 319 304 204**
8P0 945 096 A	**0 319 304 214**
8P4 945 093 B	**0 319 302 213**
8P4 945 094 B	**0 319 302 214**
8P4 945 095 C	**0 319 302 203**
8P4 945 096 C	**0 319 302 204**
803 945 701	**0 313 101 005**
803 945 701 E	**0 313 103 006**
803 945 711	**1 305 540 902**
803 945 715	**1 301 015 004**
811 941 029 C	**1 305 355 931**
811 941 029 J	**1 307 022 037**
811 941 030 C	**1 305 355 932**
811 941 030 J	**1 307 022 038**
811 941 105 C	**1 305 355 929**
811 941 105 H	**1 305 355 933**
811 941 106 C	**1 305 355 930**
811 941 106 H	**1 305 355 934**
811 953 049	**1 305 230 901**
811 953 049 F	**1 305 230 904**
811 953 050	**1 305 230 902**
811 953 050 F	**1 305 230 905**
815 941 715	**1 301 015 004**
823 941 106 A	**1 305 355 905**
823 941 653	**0 301 303 028**
823 945 701 C	**0 313 103 002**
823 945 701 D	**0 313 103 002**
823 945 719 B	**1 305 620 214**
823 953 050 D	**1 305 231 901**
861 941 031 N	**0 301 400 011**
861 941 751 E	**0 301 400 110**
862 941 039 AA	**0 301 400 508**
862 941 753 B	**0 301 400 608**
871 906 375	**1 928 300 219**
871 906 375 A	**1 928 300 219**
893 941 029 A	**1 307 022 054**
893 941 029 B	**1 307 022 086**
893 941 029 E	**1 307 022 101**
893 941 029 G	**1 307 022 095**
893 941 029 H	**1 307 022 054**
893 941 030 A	**1 307 022 055**
893 941 030 B	**1 307 022 087**
893 941 030 E	**1 307 022 102**
893 941 030 G	**1 307 022 096**
893 941 030 H	**1 307 022 055**
893 941 105	**1 305 321 906**
893 941 106	**1 305 321 907**
893 941 119	**1 301 014 220**
893 941 119 A	**1 301 014 232**
893 941 151	**1 305 363 968**
893 941 151 C	**1 305 363 968**
893 941 151 E	**1 305 321 969**
893 941 152	**1 305 363 969**
893 941 152 C	**1 305 363 969**
893 941 152 E	**1 305 321 970**
893 941 161	**1 305 542 123**
893 941 161 A	**1 305 540 216**
893 941 162 A	**1 305 540 217**
893 941 625	**1 305 230 908**
893 941 626	**1 305 230 909**
893 953 049	**1 305 230 906**
893 953 049 A	**1 305 230 906**
893 953 050	**1 305 230 907**
894 941 029 B	**1 307 022 103**
894 941 030 B	**1 307 022 104**
894 941 115	**1 305 621 123**
894 941 116	**1 305 621 124**
894 941 151	**1 305 363 970**
894 941 151 B	**1 305 363 970**
894 941 151 C	**1 305 321 971**
894 941 152	**1 305 363 971**

V

894 941 152 B	**1 305 363 971**

01L	Without gas discharge lamp, without automatic headlight range control unit, without xenon control unit, without igniter
03L	Without gas discharge lamp, with automatic headlight range control unit, without xenon control unit, without igniter
09L	Without gas discharge lamp, without automatic headlight range control unit, without xenon control unit, with igniter
11L	Without gas discharge lamp, with automatic headlight range control unit, without xenon control unit, with igniter
12L	With gas discharge lamp and automatic headlight range control unit, without xenon control unit, with igniter
14L	With gas discharge lamp, without automatic headlight range control unit, with xenon control unit and igniter
15L	Without gas discharge lamp, with automatic headlight range control unit, xenon control unit and igniter
16L	With gas discharge lamp, automatic headlight range control unit, xenon control unit and igniter
17L	With gas discharge lamp, without automatic headlight range control unit, without xenon control unit, with igniter
1ST	Bumper, 1-piece
3ST	Bumper, 3-piece
4SH	H4, housing black, for hydraulic headlight range control
ABM	Note dimensions
ADM	For applications in vehicles manufactured prior to 01.2000, use must also be made of adapter 1 304 490 436.
AFS	For vehicles with active roll angle control
AGD	Darkened
AMG	For vehicles with AMG optics package
APA	For vehicles with Avantgarde equipment package
AU	Exterior
BBR	Turn signal/stop/tail/reversing lamp
BE	Side marker lamp
BGK	Turn signal lamp, clear
BLA	Black version
BLG	Turn signal lamp, yellow
BLO	Turn signal lamp, orange
BLW	Turn signal lamp, white
BLX	Turn signal lamp, white with yellow reflector
BLZ	Turn signal lamp, white-yellow
BO	Bosch, only as replacement for Bosch equipment
BOL	Bosch, only as replacement for Bosch equipment, without headlight range control
BSW	Broad beam headlamp
BUS	For bus
BYH	For vehicles with Basic, S, Young, Hobby equipment
CAE	Interchangeable Bosch product or part for Carello
CAL	For vehicles with Carello headlamps, with headlight range control
CAO	For vehicles with Carello headlamps, without headlight range control
CHD	Chrome version
CHR	Chrome-plated cover ring
CTO	For CABINATO model
EEX	For vehicles with EL, ELX, Sporting equipment
ELX	For vehicles with ELX equipment
EST	Installation in bumper
EUS	For Eurostar model
EVH	Adjustment from rear
EXP	For export
FGR	Grey
FNB	For main beam, fog and side-marker lamp
FOS	For vehicles without headlamp washer system
FSC	Black
FSR	For vehicles with headlamp washer system
FSS	For steel bumper
GLK	Clear glass
GLO	Bulb, orange
GLW	Bulb, white
GRF	Basic version
GS	For vehicles with manual transmission
GSW	Housing, black
H1	For H1 bulb
H4O	H4, without headlight range control
HEA	Interchangeable Bosch product or part for Hella
HG	Halogen headlamp
HPS	Halogen PES - system
IFF	For infrared main beam with infrared filter
IFJ	With night driving assistant
IFN	Without night driving assistant
ILE	Bulbs included in scope of delivery
IN	Interior
KOB	For station wagon
KVL	For vehicles with cornering light
KVO	For vehicles without cornering light
KW	For box-type van
KZS	Identification: black
KZU	Identification: grey
KZW	Identification: white
LAB	Left side
LBI	With headlight range control, for Bilux bulb
LGE	Lens, yellow
LIM	For Saloon
LRO	Lens, red
LWE	Lens, white
LWM	For headlight range control with control motor (control motor included in scope of delivery)
LWN	Headlight range control motor can be retrofitted
LWO	For headlight range control with control motor (control motor not included in scope of delivery)
LWR	With headlight range control
LWS	For headlight range control, headlight range control motor only available via vehicle manufacturer
MAR	Interchangeable Bosch product or part for Marelli
MCK	For vehicles with Check-Control
MEL	For vehicles with electrical headlight range control
MGT	For vehicles with split rear door
MHK	For vehicles with tailgate
MHS	With retainer
MHY	For vehicles with hydraulic headlight range control
MIF	With integrated driving lamp
MIH	With holder
MIN	With integrated fog lamp
MLR	For manual headlight range control
MLW	Headlight range control motor can be retrofitted. Adapter for Hella, Marelli and Valeo headlight range control included
MMJ	For vehicles with Must equipment
MMN	Not for vehicles with Must equipment
MNO	Lens with acoustic studs
MNR	With rear fog light and reversing lamp
MNS	With fog lamp
MOW	Interchangeable Bosch product or part for Marelli, without headlight range control
MPL	For vehicles with pneumatic headlight range control
NCC	Not for camper vehicle
NEV	For vehicles without Evolution equipment package
NGG	Attention: Glass only, color orange
NGL	Attention: Lens only
NIO	Without level control
NIV	Level control
NLX	Not for de luxe version
NMT	Not for vehicles with M-Technic aerodynamics package
NOP	With standard lens system
NOR	Standard version
NPW	Not for flatbed truck
NRS	Supplementary equipment set
NSL	With rear fog light
NSP	Not for Sporting version
NSV	Not for SUV version
NSW	Standard headlamp
OBI	Without headlight range control, for Bilux bulb
OBL	Without side-marker lamp
OCK	For vehicles without Check-Control
OE	Fitted at top
OEW	For vehicles without electrical headlight range control
OFS	For vehicles without active roll angle control
OHS	Without retainer
OIF	Without integrated driving lamp
OMG	For vehicles without AMG optics package
ONE	Without rear fog light
ONO	Lens without acoustic studs
ONS	Without fog lamp
OPA	For vehicles without Avantgarde equipment package
OS	Without side light
OSK	Without protective cap
OWR	Without headlight range control
PEV	For vehicles with Evolution equipment package
PW	For flatbed truck
QAS	Square connector
RAS	Connector, round
RAV	Metal-coated frame
RDG	Red, dark grey
RDO	Without sealing gasket
RFM	With reversing lamp
RFO	Without reversing lamp
RGU	Grey frame
RNL	With reversing lamp on right and fog lamp on left
RSW	Black frame
RWE	Red, white
RWT	Reflector, white
SAT	Semi-trailer tractor
SAU	For vehicles with S equipment
SAZ	Set
SBE	Heavy duty
SE	On side
SH7	With H7 and H1 bulb
SIB	With black interior trim panel
SOB	Headlamp without turn signal lamp
SRA	For headlamp washer system
SSH	For vehicles with S, SX, HSD, Selecta, Van equipment
SSO	For vehicles with Suite, SX, Soleil equipment
SSX	For vehicles with S, SX equipment
STU	Notchback
SWG	Yellow headlamps
SWW	White headlamps
SXA	For vehicles with SX equipment
SYG	For vehicles with S, Young and basic equipment
T35	3/5 doors
TBL	With titanium-colored trim
TNK	The vehicle data card is required for definite identification of the Bosch number. The components listed with the product must coincide with those on the data card.
TU3	3 doors
TU4	4 doors
TU5	5 doors
TW	Product installed must be determined on vehicle or engine.
UE	Installed at bottom
VAO	Interchangeable Bosch product or part for Valeo
VML	Interchangeable Bosch product or part for Valeo, for vehicles with power steering and without air conditioner
VSP	For Sporting version
WW	Optional
XXX	Available while stocks last
ZNL	With two rear fog lights

	Part number
	Type
	Page reference
	Workshop pack
	Self-service pack
	Qty. per self-service pack
	EAN code self-service blister pack
	Self-service pack dimensions
	ECE type
	Rated voltage in Volts
	Rated power
	Base type
	Number
	Search number

	Illustration
	Commercial vehicles/Passenger cars
	Passenger cars
	Commercial vehicles
	Agricultural machine / construction machine
	Motorcycle
	Date/ Production period
	Export market
	Chassis-No.
	Installation on left
	Installation on right
	Special case
	Bulbs

The "speaking" **part-number system**



System 0 30 ...

0 30X XXX XXX

- 300: Headlamp Symmetrical light distribution
- 301: Headlamp/Europe (ECE)
- 302: Headlamp/USA (SAE)
- 303: Motorcycle headlamps
- 304: Low-beam headlamps (motor vehicles < 25 km/h)
- 305: Fog lamp and flood lamp
- 306: Driving lamp
- 307: Backup lamp

Model series

- 0-3: Right-hand traffic
- 4-8: Left-hand traffic
- 9: Set packaging

- 0-6: Halogen headlamp
- 7-8: Litronic headlamp

- 1,3,5,7: Left mounting
- 2,4,6,8: Right mounting

System 0 318 ...

0 318 XXX XXX

- 0-1: Headlamp
- 2: Turn signal lamp
- 3: Tail lamp unit
- 4: Fog lamp
- 5: Driving lamp

Model series

- 0-4: Right-hand traffic
- 5-9: Left-hand traffic

- 0-1: Yellow
- 2-3: White
- 4: Gray

- 0: White
- 1: Yellow

- 0: White
- 1: Yellow

- 0: Bilux R2
- 1-6: Halogen
- 7-8: Xenon

- 1,3,5,7: Left mounting
- 2,4,6,8: Right mounting

System 0 319 ...

0 319 XXX XXX

- 2: Turn signal lamp
- 3: Tail lamp unit
- 6: Lamp

Model series

- 0-1: Yellow
- 2-3: White
- 4: Gray
- 7: LED

- 0-1: Yellow turn signal-lamp
- 2-3: White turn signal-lamp
- 4: Black
- 5: Screen
- 7: LED

- 1: Side-marker lamp
- 2: Additional stop lamp
- 3: Reflector

- 0-3: Complete lamp
- 4-6: Lens
- 7-9: Bulb carrier

- 0-3: Complete lamp
- 4-6: Lens
- 7-9: Bulb carrier

- 1: Yellow
- 2: White
- 4: Yellow lens
- 5: White lens

- 0,1,8: Red
- 2,3,9: White
- 7: Cap

- 1,3,5,7: Left mounting
- 2,4,6,8: Right mounting





Professionally tested!

Quickly repaired and replaced!





Satisfied customers!

de

Sichere Diagnose. Zeitsparende Reparatur. Bosch-Diagnostics und Ersatzteile.

Alles aus einer Hand. Bosch bietet der Werkstatt ein Komplettprogramm zur Steigerung von Effizienz und Qualität in der täglichen Arbeit.
Vom weltweit aktiven Entwickler und führenden Hersteller von Kfz-Systemtechnik kommen die Ersatzteile in bekannter Original-Qualität.

en

Reliable diagnosis. Time-saving repairs. Bosch diagnostics and service parts.

Everything from one single source. Bosch has a complete program available which increases efficency and quality in the workshop's daily work.
The service parts from the globally active development expert and leading manufacturer of automotive system technology are in renowned Bosch OE quality.

fr

Diagnostic fiable. Réparation rapide. Diagnostics et pièces de rechange Bosch.

Fournisseur unique, Bosch propose aux réparateurs une gamme complète qui améliore au quotidien l'efficacité et la qualité du travail.
En tant que concepteur présent dans le monde entier et leader dans la fabrication de systèmes pour automobiles, ses pièces de rechange sont reconnues pour offrir la qualité des pièces d'origine.

it

Diagnosi sicure. Riparazioni rapide. Diagnostica, ricambi e formazione: tutto da un unico fornitore.

Bosch offre all'officina un programma completo per una maggior efficienza e qualità nel lavoro quoditiano d'autoriparazione. Con il programma «Diagnostics», Bosch mette a disposizione dell'officina anche hardware e software di diagnosi perfettamente in sintonia tra loro oltre a formazione, assistenza e consulenza tecnica. Competenza e qualità, quindi, per il futuro dell'officina.

es

Diagnóstico seguro. Ahorro de tiempo en la reparación. Diagnosis Bosch y piezas de recambio.

Todo de un solo proveedor. Bosch, fabricante líder, ofrece al taller un programa completo para incrementar la eficacia y la calidad en el trabajo diario. Bajo el nombre de Diagnosis Bosch se ponen a disposición del taller el hardware y software compatibles entre sí, la formación técnica, la hotline técnica y la base de datos técnicos.
Competencia y calidad para el futuro de su taller.

BOSCH

1 987 721 032/201001

AA/MKI2 – 01.2010 – En

© 2010 Robert Bosch GmbH

Automotive Aftermarket
Postfach 41 09 60
76225 Karlsruhe

Token fee: € 5,00

www.bosch.de/aa

Editorial closing: 15.12.2009

Subject to change without notice. Please direct questions and comments to our Authorized Representative in your country. This edition supersedes all previous editions.

4 047024 629790